XDM1000 Series

Digital Multimeter

User Manual

- **XDM1041-U**
- **XDM1041-R**
- **XDM1241**

For product support, visit:www.owon.com.hk/download

※：The illustrations, interface, icons and characters in the user manual may be slightly different from the actual product. Please refer to the actual product.

Dec. 2025 edition V1.1.6

Copyright © LILLIPUT Company. All rights reserved.

The LILLIPUT's products are under the protection of the patent rights, including ones which have already obtained the patent rights and those which are applying for. The information in this manual will replace all materials published.

The information in this manual was correct at the time of printing. However, LILLIPUT will continue to improve products and reserves the rights to change specification at any time without notice.

owon® is the registered trademark of the LILLIPUT Company.

Fujian LILLIPUT Optoelectronics Technology Co., Ltd.

No. 19, Heming Road

Lantian Industrial Zone, Zhangzhou 363005 P.R. China

Tel: +86-596-2130430 **Fax:** +86-596-2109272

Web: www.owon.com **E-mail:** info@owon.com.cn

General Warranty

We warrant that the product will be free from defects in materials and workmanship for a period of 3 years (1 year for accessories) from the date of purchase of the product by the original purchaser from our company. This warranty only applies to the original purchaser and is not transferable to a third party.

If the product proves defective during the warranty period, we will either repair the defective product without charge for parts and labour, or will provide a replacement in exchange for the defective product. Parts, modules, and replacement products used by our company for warranty work may be new or reconditioned like new. All replaced parts, modules and products become the property of our company.

In order to obtain service under this warranty, the customer must notify our company of the defect before the expiration of the warranty period. Customer shall be responsible for packaging and shipping the defective product to the designated service centre, a copy of the customers proof of purchase is also required.

This warranty shall not apply to any defect, failure or damage caused by improper use or improper or inadequate maintenance and care. We shall not be obligated to furnish service under this warranty a) to repair damage resulting from attempts by personnel other than our company representatives to install, repair or service the product; b) to repair damage resulting from improper use or connection to incompatible equipment; c) to repair any damage or malfunction caused by the use of not our supplies; or d) to service a product that has been modified or integrated with other products when the effect of such modification or integration increases the time or difficulty of servicing the product.

Please contact the nearest Sales and Service Offices for services.

Excepting the after-sales services provided in this summary or the applicable warranty statements, we will not offer any guarantee for maintenance declared or hinted, including but not limited to the implied guarantee for marketability and special-purpose acceptability. We should not take any responsibilities for any indirect, special, or consequent damages.

Table of Contents

1. Safety Information *1*

Safety Terms and Symbols 1

General Safety Requirements 2

Measurement Limits 3

Main Input Terminals Measurement Limits 3

Current Input Terminal Measurement Limits 3

Measurement Category 3

2. Quick Start *5*

General Inspection 5

Dimensions 5

Front Panel Overview 6

Rear Panel Overview 7

User Interface 8

Power On 9

Measurement Connections 9

3. Functions and Operations *11*

To Set the Range 11

Measurement Speed 11

Basic Measurement Functions 12

Measuring DC Voltage 12

Measuring AC Voltage 13

Measuring DC Current 14

Measuring AC Current 15

Measuring Resistance 16

Continuity Test 17

Diode Test 18

Measuring Capacitance 19

Measuring Frequency and Period 20

Measuring Temperature 20

Dual Display 22

Data Hold 23

Math 23

Max/Min 23

dB/dBm 23

Relative Value 24

Data Record Function 24

Manual Record 24

Auto Record 25

Utility Menu 25

Language 26

Backlight 26

Timed shutdown （Only for DC power supply model） 26

Communication interface settings 26

Clock 26

Default 26
Power-On Setting 27

4. Measurement Tutorial 28

Loading Errors (DC Voltage) 28

True RMS AC Measurements 29

5. Troubleshooting 30

6. Technical Specifications 31

7. Appendix 33

Appendix A: Enclosure 33

Appendix B: General Care and Cleaning 33

Appendix C: Line Fuse Replacement （Only for AC power supply model） 34

Appendix D: Charging and Replacement of Battery （Only for DC power supply model） 34

1. Safety Information

Safety Terms and Symbols

Safety Terms

Terms in this Manual. The following terms may appear in this manual:

⚠ **Warning:** Warning indicates the conditions or practices that could result in injury or loss of life.

⚠ **Caution:** Caution indicates the conditions or practices that could result in damage to this product or other property.

Terms on the Product. The following terms may appear on this product:

Danger: It indicates an injury or hazard may immediately happen.

Warning: It indicates an injury or hazard may be accessible potentially.

Caution: It indicates a potential damage to the instrument or other property might occur.

Safety Symbols

Symbols on the Product. The following symbol may appear on the product:

⎓	Direct current (DC)	⚡	Warning, risk of electric shock
∼	Alternating current (AC)	⚠	Caution, risk of danger (refer to this manual for specific Warning or Caution information)
≂	Both direct and alternating current	CE	Conforms to European Union directives
⏚	Ground terminal	⏚	Chassis Ground

CAT I (1000V)	IEC Measurement Category I. The maximum measurable voltage is 1000 Vpk in the HI -LO terminal.
CAT II (600V)	IEC Measurement Category II. Inputs may be connected to AC mains power (up to 600 VAC) under Category II overvoltage conditions.
🗑	This product complies with the WEEE Directive (2012/19/EC) marking equipment. The affixed product label indicates that you must not discard this electrical/electronic product in domestic household waste.

General Safety Requirements

Before any operations, please read the following safety precautions to avoid any possible bodily injury and prevent this product or any other products connected from damage. In order to avoid any contingent danger, this product is only used within the range specified.

- **Use Proper Power Cord.** Use only the power cord supplied with the product and certified to use in your country.
- **Product Grounded.** This instrument is grounded through the power cord grounding conductor. To avoid electric shock, the grounding conductor must be grounded. The product must be grounded properly before any connection with its input or output terminal.
- **Limit operation to the specified measurement category, voltage, or amperage ratings.**
- **Check all Terminal Ratings.** To avoid instrument damage and the risk of electric shock, check all the Measurement Limits and markers of this product. Refer to the user's manual for the Measurement Limits before connecting to the instrument. Do not exceed any of the Measurement Limits defined in the following section.
- **Do not operate without covers**. Do not operate the instrument with covers or panels removed.
- **Use Proper Fuse.** Use only the specified type and rating fuse for this instrument.
- **Avoid exposed circuit**. Do not touch exposed junctions and components when the instrument is powered.
- **Do not operate if in any doubt.** If you suspect damage occurs to the instrument, have it inspected by qualified service personnel before further operations.
- **Use your instrument in a well-ventilated area.** Inadequate ventilation may cause increasing of temperature or damages to the device. Please keep well ventilated and inspect the intake regularly.
- **Do not operate in wet conditions.** In order to avoid short circuiting to the interior of the device or electric shock, please do not operate in a humid environment.
- **Do not operate in an explosive atmosphere.**
- **Keep product surfaces clean and dry.**
- **Only the qualified technicians can implement the maintenance.**

Measurement Limits

The protection circuitry of the multimeter can prevent damage to the instrument and protect against the danger of electric shock, when the Measurement Limits are not exceeded. To ensure safe operation of the instrument, do not exceed the Measurement Limits shown on the front panel, it is defined as follows:

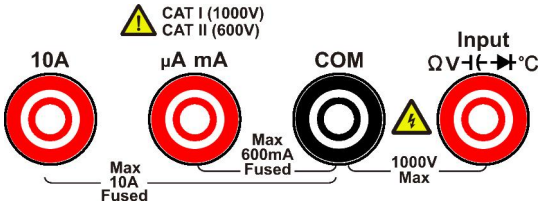

Main Input Terminals Measurement Limits

The ΩV⊣⊢▶⊢°C Input and **COM** Input terminals are used for voltage, resistance, continuity, frequency (period), capacitance, diode, and temperature test measurements. The Measurement Limit is defined for these terminals:

- **ΩV⊣⊢▶⊢°C Input to COM Input Measurement Limit**

  The measurement limit from ΩV⊣⊢▶⊢°C Input to **COM** Input is 1000 VDC or 750 VAC, which is also the maximum voltage measurement. This limit can also be expressed as 1000 Vpk maximum.

Current Input Terminal Measurement Limits

- The measurement limit from **10A** input terminal to **COM** Input terminal is 10 A (DC or AC).
- The measurement limit from **µA mA** input terminal to **COM** Input terminal is 600 mA (DC or AC).

Note that the current input terminals will always be at approximately the same voltage as the **COM** Input terminal.

Measurement Category

The safety rating of the multimeter:

1000 V, CAT I

IEC Measurement Category I. The maximum measurable voltage is 1000 Vpk in the HI -LO terminal.

600 V, CAT II

IEC Measurement Category II. Inputs may be connected to AC mains power (up to 600 VAC) under Category II overvoltage conditions.

Measurement category definition

Measurement CAT I applies to measurements performed on circuits not directly connected to the AC mains. Examples are measurements on circuits not derived from the AC mains and specially protected (internal) mains- derived circuits.

Measurement CAT II applies to protect against transients from energy-consuming equipment supplied from the fixed installation, such as TVs, PCs, portable tools, and other household circuits.

Measurement CAT III applies to protect against transients in equipment in fixed equipment installations, such as distribution panels, feeders and short branch circuits, and lighting systems in large buildings.

Measurement CAT IV applies to measurements performed at the source of the low-voltage installation. Examples are electricity meters and measurements on primary over current protection devices and ripple control units.

2. Quick Start

General Inspection

After you get a new multimeter, it is recommended that you should make a check on the instrument according to the following steps:

1. **Check whether there is any damage caused by transportation.**

   If it is found that the packaging carton or the foamed plastic protection cushion has suffered serious damage, do not throw it away first till the complete device and its accessories succeed in the electrical and mechanical property tests.

2. **Check the Accessories**

   The supplied accessories have been already described in the *Appendix A: Enclosure* of this Manual. You can check whether there is any loss of accessories with reference to this description. If it is found that there is any accessory lost or damaged, please get in touch with our distributor responsible for this service or our local offices.

3. **Check the Complete Instrument**

   If it is found that there is damage to the appearance of the instrument, or the instrument cannot work normally, or fails in the performance test, please get in touch with our distributor responsible for this business or our local offices. If there is damage to the instrument caused by the transportation, please keep the package. With the transportation department or our distributor responsible for this business informed about it, a repairing or replacement of the instrument will be arranged by us.

Dimensions

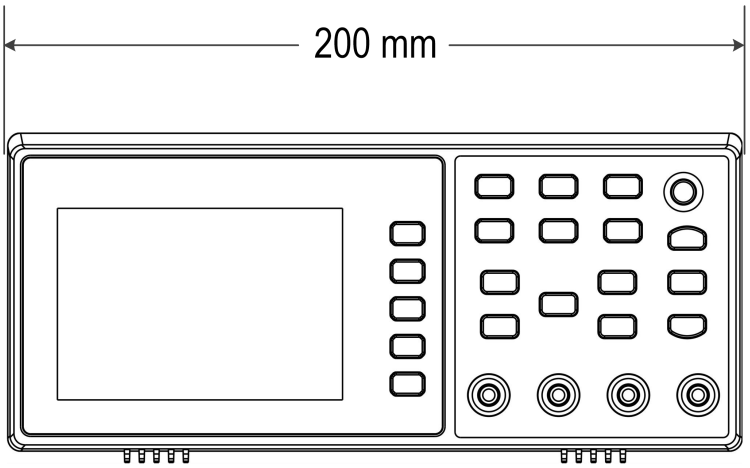

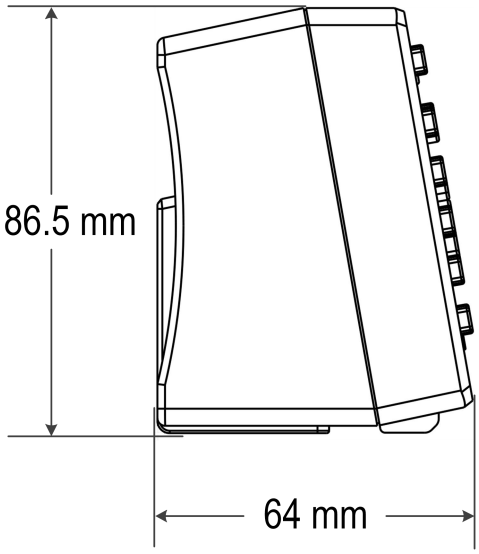

Front Panel Overview

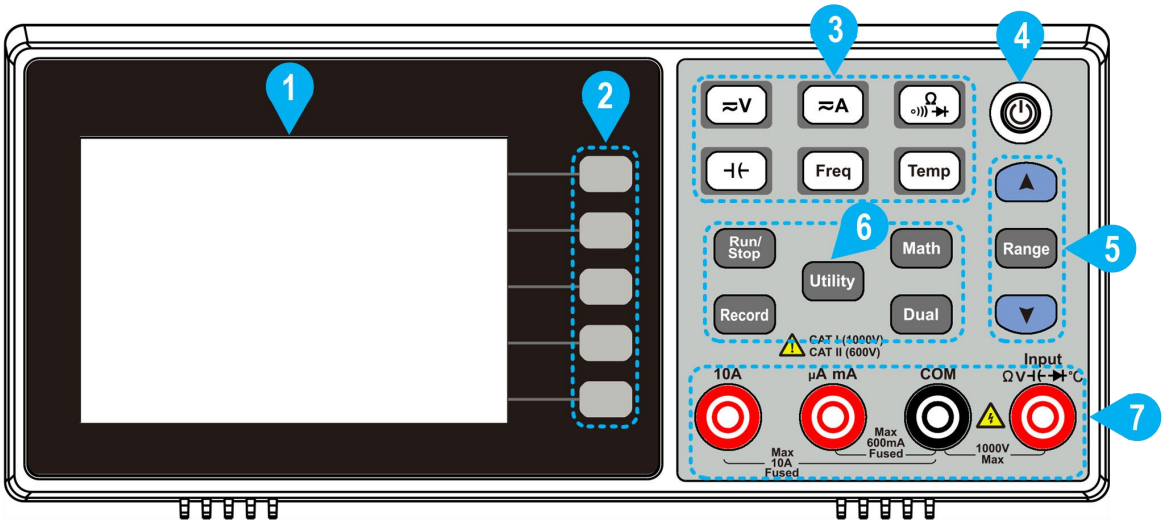

Figure 2- 1 Front panel overview

Item	Name	Description
1	**LCD**	Display the user interface.
2	**Menu selection Keys**	Activate the corresponding menu.
3	**Measurement Function Keys**	≈V DC or AC voltage measurements. ≈A DC or AC current measurements. Ω Resistance, continuity, and diode measurements. ⊣⊢ Capacitance measurements. Freq Frequency/Period measurements. Temp Temperature measurements.
4	**Power button**	Turn on/off the multimeter.

5	**Range/Direction Keys**	When the Range softkey is shown on the right menu, you can press the Range key to switch between auto and manual range. Press ▲ or ▼ keys to enable manual range, and increase or decrease the measurement range. When setting a parameter, press Range to move the cursor, press ▲ or ▼ keys to increase or decrease the value.
6	**Operation Keys**	
	Run/Stop	Start or stop auto trigger. When the trigger is stopped, the displayed data will be held.
	Record	Access menus of manual record and auto record. See page 24, *Data Record Function*.
	Utility	Set the auxiliary system function, including Language, Backlight, Clock, Default, and Serial port.
	Math	Perform math operations (Max/Min, dB/dBm) on the measurement results.
	Dual	Press this key to display the function list on the right menu, select a function, if the function is supported, the reading will be displayed in the Vice Display.
7	**Input Terminals**	Signal input terminals, used for AC/DC current, voltage, resistance, continuity, frequency (period), capacitance, diode, and temperature test measurements.

Rear Panel Overview

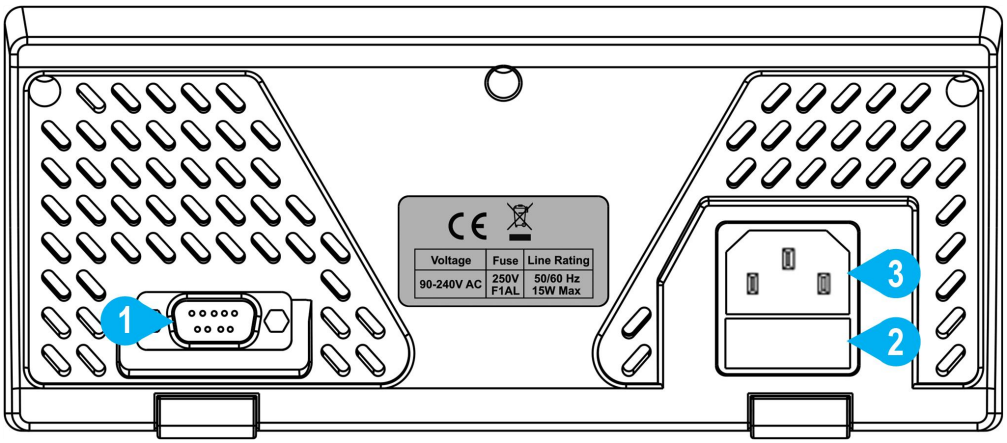

Figure 2- 2 Rear panel overview （Take the -R model AC power supply for instance ）

Item	Name	Description
1	**Communication interface**	-R models can be connected to a computer through a serial port; -U model can be connected to the computer via USB Device.
2	**Line Fuse**	The fuse rating is 250 V, F1AL. To replace the fuse, see page 34, *Appendix C: Line Fuse Replacement*.

3	**AC Mains Input**	AC mains input connector.

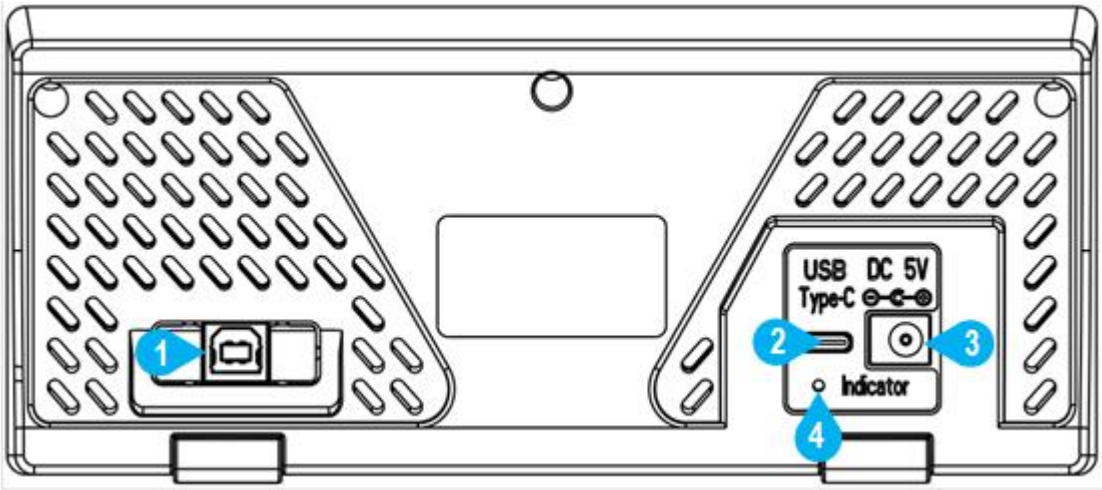

Figure 2- 3 Rear panel overview （Take the AC power supply for instance ）

1	**Communication interface**	Connect the PC through this port.
2	**USB Type -C port**	DC mains input connector.
3	**Mains Input**	DC mains input connector.
4	**Indicator**	Fully charged: green light; Charging: red light ; Charging fault: LED blinking.

User Interface

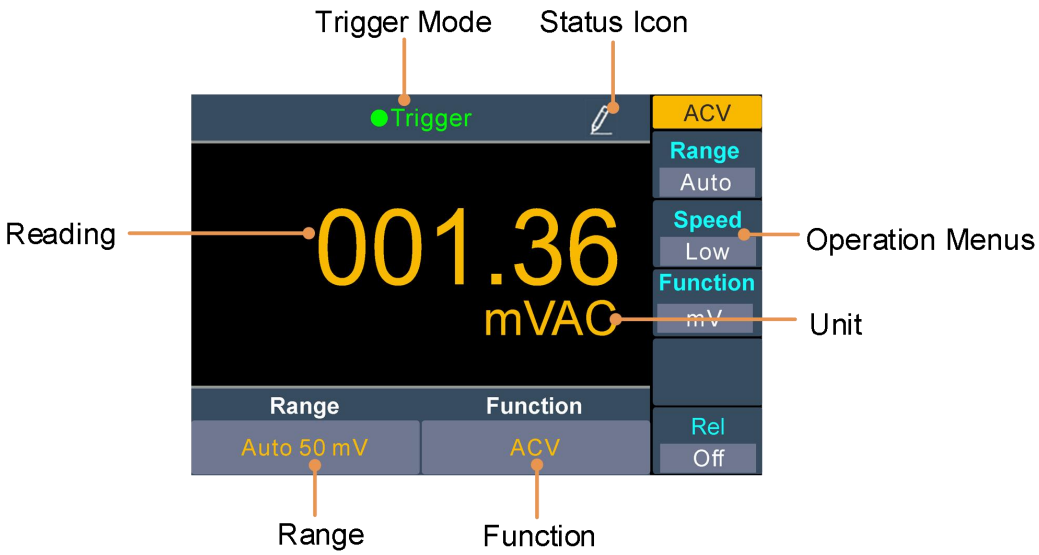

Trigger Mode

Display	Description
Trigger	Auto trigger

Status Icon

Icon	Description
	Auto record function is running
	Manual record

Figure 2-4 User interface (Single display - Take the model with DC power supply for instance)

Note: The following screenshots take the model with AC power supply for instance.

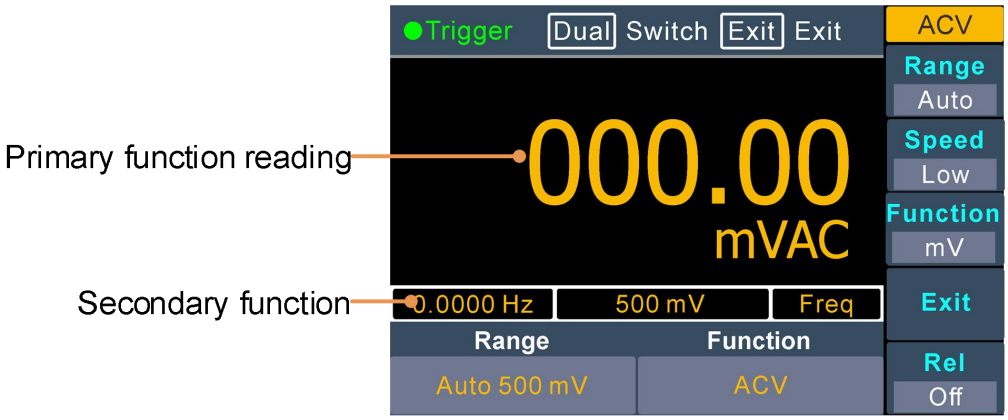

Figure 2- 5 User interface (Dual display)

Power On

(1) Model with AC power supply: Connect the instrument to the AC supply using the supplied power cord.

Model with DC power supply: use the USB to DC cable provided in the accessory to connect the instrument to the USB adapter, it can also be powered by USB Type-C.

Warning:
To avoid electric shock, the instrument must be grounded properly.

When using an adapter for power supply, it is recommended to use a grounded adapter, otherwise it may have a certain impact on the measurement.

(2) Press down the **power button** at the front panel, the screen shows the boot screen.

Measurement Connections

After selecting the desired measurement function, please connect the signal (device) under test to the multimeter according to the method below. To avoid instrument damage, do not discretionarily switch the measurement function when measuring.

DC Voltage Measurement

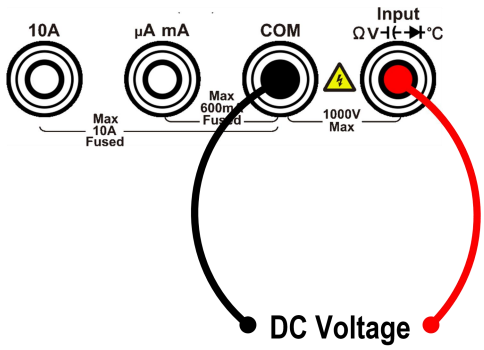

AC Voltage Measurement

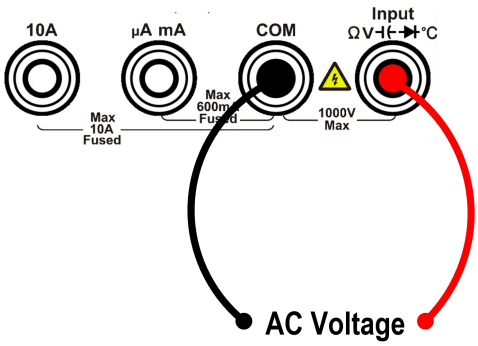

DC Current Measurement

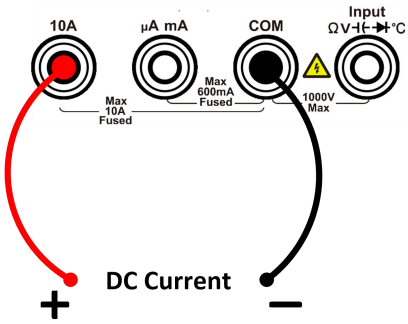

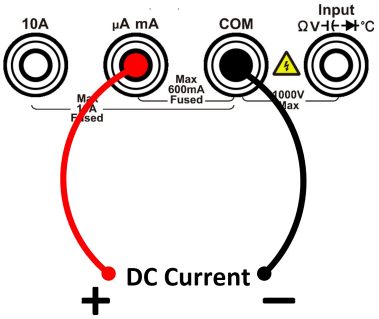

AC Current Measurement

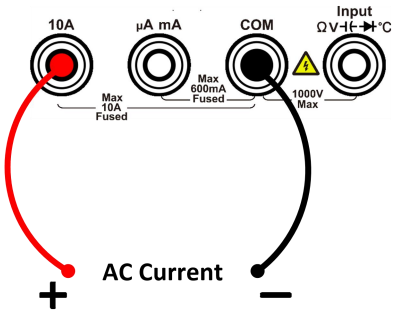

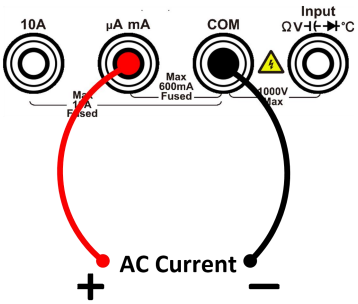

Resistance Measurement

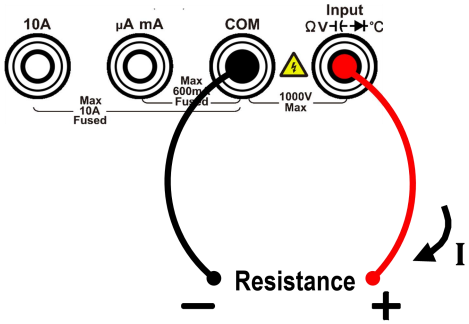

Continuity Test

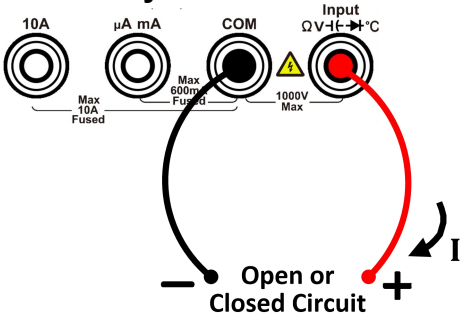

Diode Measurement

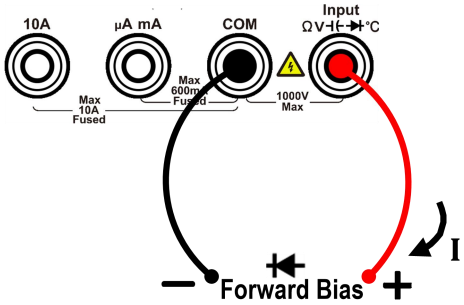

Capacitance Measurement

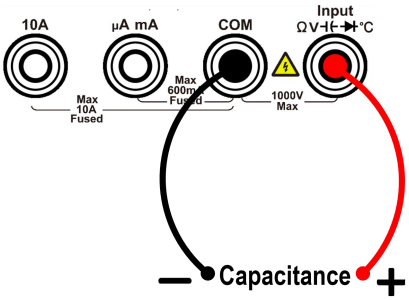

Frequency/Period Measurement

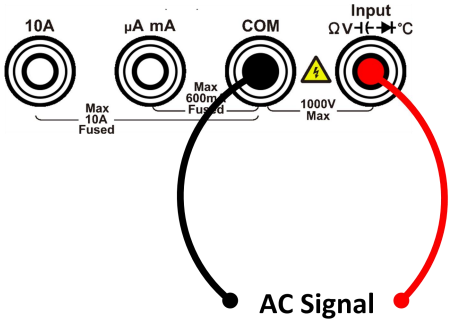

Temperature Measurement

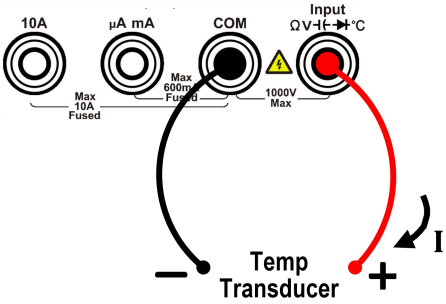

3. Functions and Operations

To Set the Range

The instrument provides auto and manual range. In auto range, the multimeter selects a proper range automatically according to the input signal; in manual range, you can use the front panel key or menu softkey to set the range. The auto range can bring a lot of convenience for users while the manual range provides higher reading precision.

1st Method: Use the front panel key to set the range.

When the Range softkey is shown on the right menu, you can press the Range key to switch between auto and manual range. Press ▲ or ▼ keys to enable manual range, and increase or decrease the measurement range.

2nd Method: Select the range in the measurement function menu.

Select auto range: In the measurement function menu, press the Range softkey, select Auto.
Select manual range: In the measurement function menu, press the Range softkey, select a range except Auto.

Note:

- When the input signal exceeds the current range, "overload" will be displayed.
- By default, the range is set to Auto at power-on or after a reset.
- Auto range is recommended if you are not sure about the measurement range in order to protect the instrument and obtain accurate data.

Measurement Speed

The instrument provides three types of measurement speed:
"**Low**" speed is 4 reading/s; "**Mid**" speed is 16 reading/s; "**High**" speed is 65 reading/s.
In DCV, ACV, DCI, ACI and resistance measurements, the measurement speed is selectable.

Basic Measurement Functions

Measuring DC Voltage

This section describes how to configure DC voltage measurements.

Operating Steps:

1. **Enable the DCV measurement.**
   Press ≈V on the front panel to enter DCV measurement mode.

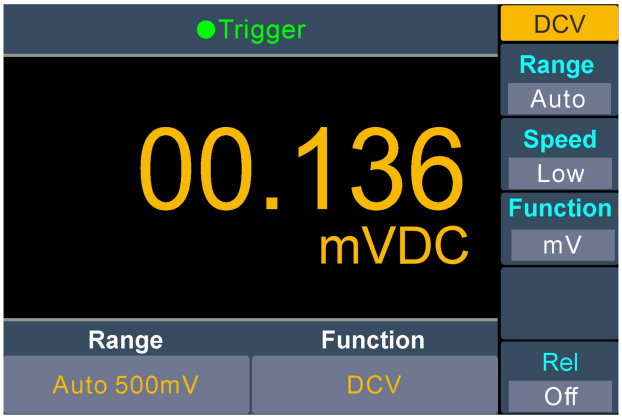

2. **Connect the test lead.**

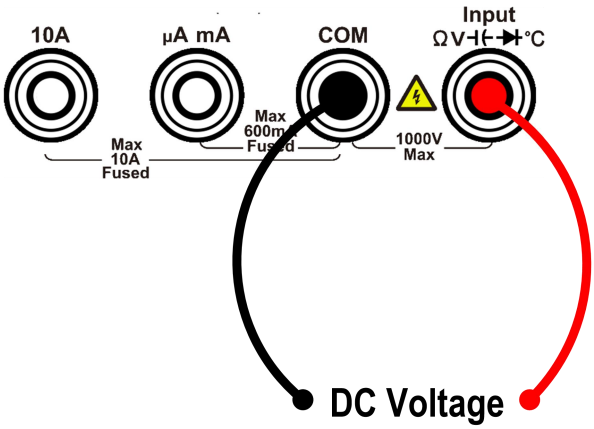

3. **Set the function.**
   Press the Function softkey to switch between V and mV.
4. **Set the range.**
   Press the Range softkey to set the range. Auto range automatically selects the range for the measurement based on the input.
   Note:
   - 1000 V input protection is available in all ranges.
   - 10% over range for all ranges except 1000 V range.
   - If the reading exceeds 1050 V in 1000 V range, "overload" will be displayed.
5. **Set the measurement speed.**
   Press the Speed softkey to switch between Low, Mid and High. See page 12 ” Measurement Speed”.
6. **Set the relative value.**
   Press the Rel softkey to turn on or off the relative operation. For relative operation, the multimeter subtracts the pre-specified value of REL operation from the actual

measurement result and displays the result. See page 24, *Relative Value*.

Measuring AC Voltage

This section describes how to configure AC voltage measurements.

Operating Steps:

1. **Enable the ACV measurement.**

   Press ≈V on the front panel, press it again to enter ACV measurement mode.

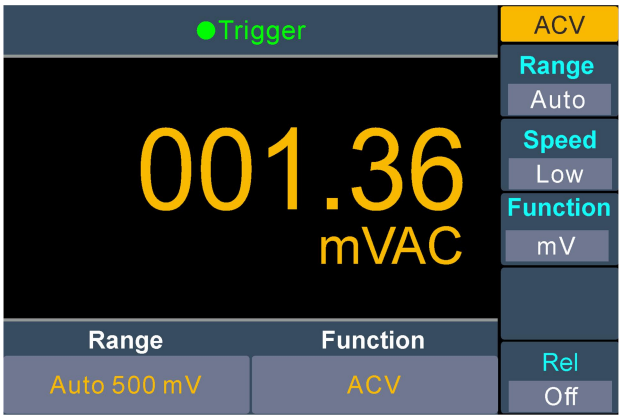

2. **Connect the test lead.**

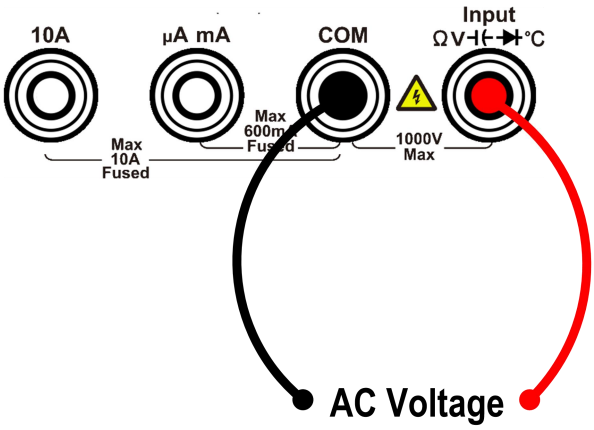

3. **Set the function.**

   Press the Function softkey to switch between V and mV.

4. **Set the range.**

   Press the Range softkey to set the range. Auto range automatically selects the range for the measurement based on the input.

   Note:

   - 750 V input protection is available in all ranges.
   - 10% over range for all ranges except 750 V range.

   If the reading exceeds 787.5 V in 750 V range, "overload" will be displayed.

5. **Set the measurement speed.**

   Press the Speed softkey to switch between Low, Mid or High. See page 11, "***Measurement Speed*** ".

6. **Set the relative value.**

   Press the Rel softkey to turn on or off the relative operation. For relative operation, the multimeter subtracts the pre-specified value of REL operation from the actual measurement result and displays the result. See page 24, *Relative Value*.

Measuring DC Current

This section describes how to configure DC current measurements.

Operating Steps:

1. **Enable the DCI measurement.**
   Press [≂A] on the front panel to enter DCI measurement mode.
2. **Set the function.**
   Press the Function softkey to switch between A and mA.
3. When the Function is set as **A**, connect the test lead as below.

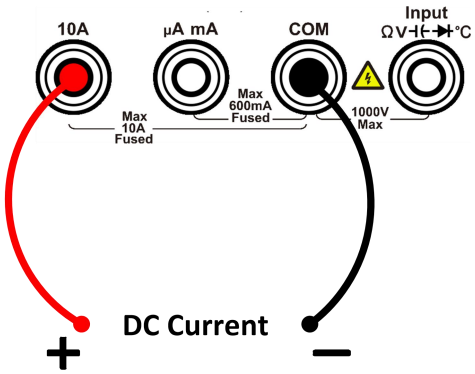

When the Function is set as **mA**, connect the test lead as below.

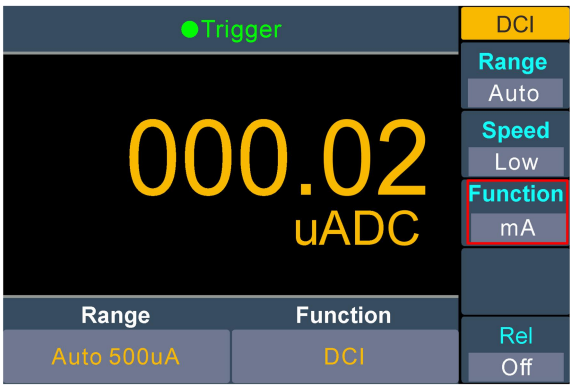

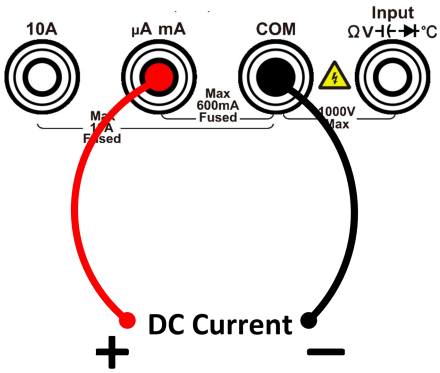

4. **Set the range.**
   Press the Range softkey to set the range. Auto range automatically selects the range for the measurement based on the input.
   Note:
   - The multimeter uses two kinds of fuses for current protection: A 10A fuse is built into the 10A input terminal for overcurrent protection, and a 1mA fuse is built into the uAmA input terminal for overcurrent protection.
   - 10% over range for all ranges except 10 A range.
   If the reading exceeds 10.5 A in 10 A range, "overload" will be displayed.
5. **Set the measurement speed.**
   Press the Speed softkey to switch between Low, Mid and High. See page 11, "***Measurement Speed*** ".
6. **Set the relative value.**
   Press the Rel softkey to turn on or off the relative operation. For relative operation, the multimeter subtracts the pre-specified value of REL operation from the actual measurement result and displays the result. See page 24, *Relative Value*.

Measuring AC Current

This section describes how to configure AC current measurements.

Operating Steps:

1. **Enable the ACI measurement.**

   Press [≈A] on the front panel, press it again to enter ACI measurement mode.

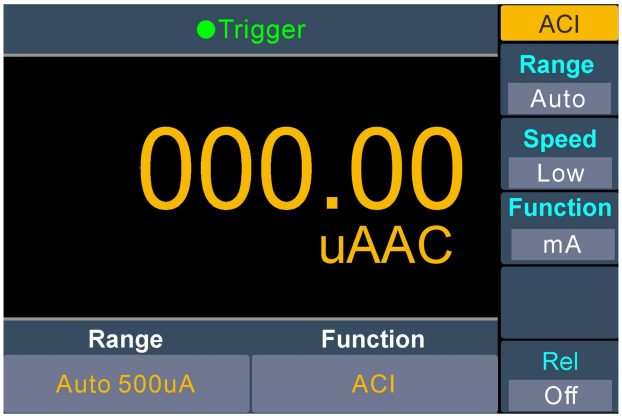

2. **Set the function.**

   Press the Function softkey to switch between A and mA.

3. When the Function is set as **A**, connect the test lead as below.

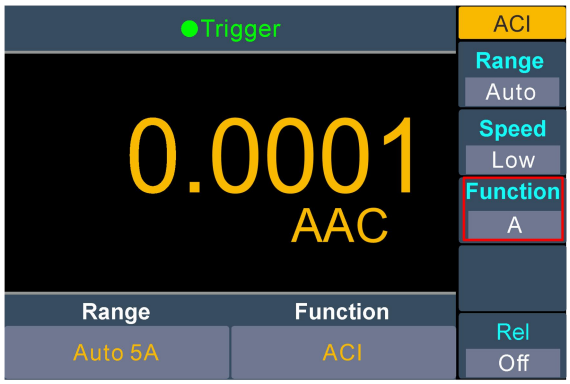

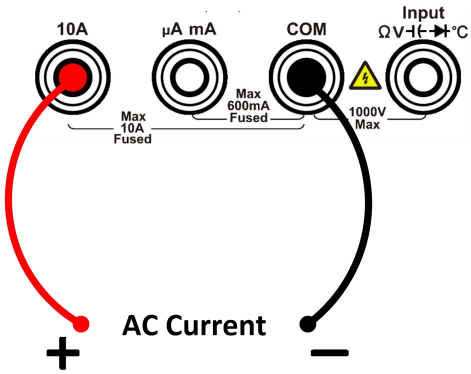

When the Function is set as **mA**, connect the test lead as below.

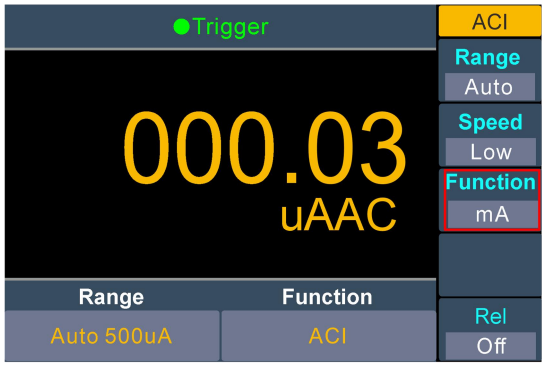

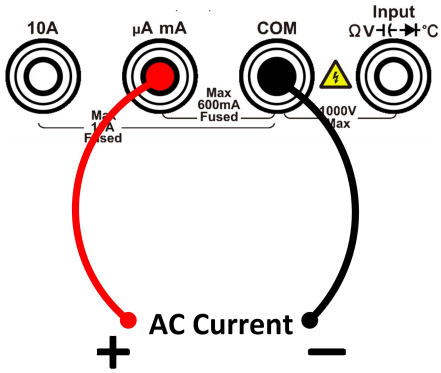

4. **Set the range.**

   Press the Range softkey to set the range. Auto range automatically selects the range for the measurement based on the input.

   Note:

- The multimeter uses two kinds of fuses for current protection: A 10A fuse is built into the 10A input terminal for overcurrent protection, and a 1A fuse is built into the uAmA input terminal for overcurrent protection.
- 10% over range for all ranges except 10 A range.
  If the reading exceeds 10.5 A in 10 A range, "overload" will be displayed.

5. **Set the measurement speed.**
   Press the Speed softkey to switch between Low, Mid and High. See page 11, ***Measurement Speed*** .
6. **Set the relative value.**
   Press the Rel softkey to turn on or off the relative operation. For relative operation, the multimeter subtracts the pre-specified value of REL operation from the actual measurement result and displays the result. See page 24, *Relative Value*.

Measuring Resistance

This section describes how to configure resistance measurements.

Operating Steps:

1. **Enable resistance measurement.**
   Press on the front panel to enter resistance measurement mode.

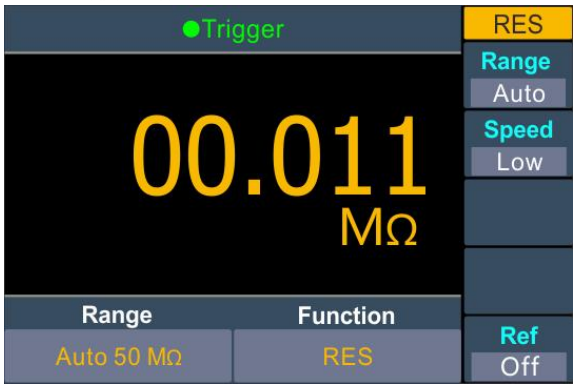

2. **Connect the test lead.**

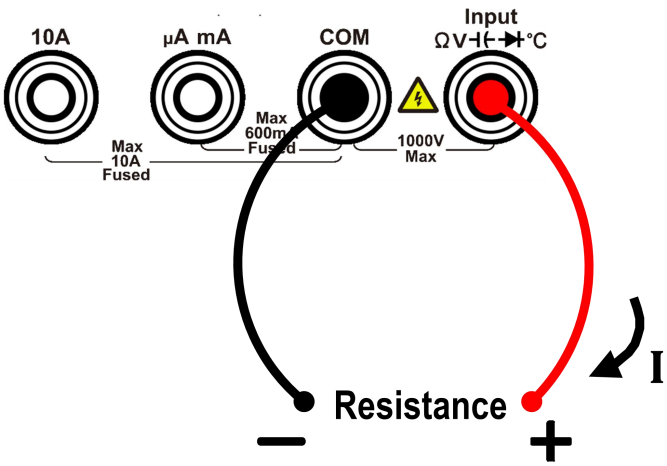

3. **Set the range.**
   Press the Range softkey to set the range. Auto range automatically selects the range for the measurement based on the input.
   Note:
   - 1000 V input protection is available in all ranges.
   - 10% over range for all ranges except 50 MΩ range.

If the reading exceeds 55 MΩ in 50 MΩ range, "overload" will be displayed.

4. **Set the measurement speed.**
   Press the Speed softkey to switch between Low, Mid and High. See page 11, ***Measurement Speed*** .

5. **Set the relative value.**
   Press the Rel softkey to turn on or off the relative operation. For relative operation, the multimeter subtracts the pre-specified value of REL operation from the actual measurement result and displays the result. See page 24, *Relative Value*.
   Tip:
   - If the measured resistance is small, relative operation is recommended in order to reduce the error caused by test lead.
   - Both ends of the measured resistance should be placed far away from your hands and desks that can conduct electricity; otherwise, the measurement result might be inaccurate. The greater the measured resistance is, the greater the affect will be.

Continuity Test

This section describes how to configure continuity test.

Operating Steps:

1. **Enable the continuity test.**
   Press on the front panel, press it again to enter continuity test mode.

2. **Connect the test lead.**

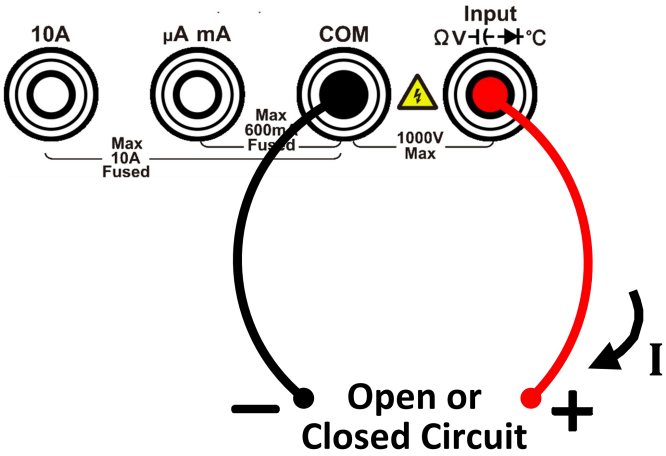

3. **Set the beeper.**
   Press the Beeper softkey to enable or disable the beeper. When the beeper is enabled, the reading is below 30 Ω, the multimeter will beep continuously.

4. **Set the short-circuit resistance.**
   Press the Threshold softkey to set the short-circuit resistance.
   Press the front panel Range key to move the cursor, press ▲ or ▼ keys to increase or decrease the value. The range for the 1 Ω to 1000 Ω. The default is 50 Ω.
5. **Continuity measurements behave as follows:**

Circuit resistance to be measured	Display and beep
≤ Short-circuit resistance	Displays measured resistance and beeps (if beeper enabled)
Short-circuit resistance to 1000Ω	Displays measured resistance without beeping
> 1000Ω	Displays "Open" with no beep

Diode Test

This section describes how to configure diode test.

Operating Steps:

1. **Enable the diode test.**
   Press Ω on the front panel, press it twice to enter diode test mode.

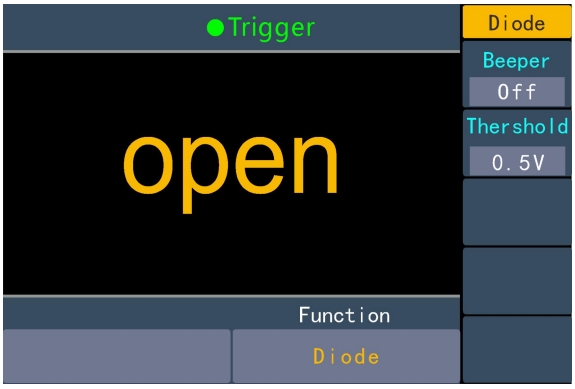

2. **Connect the test lead.**

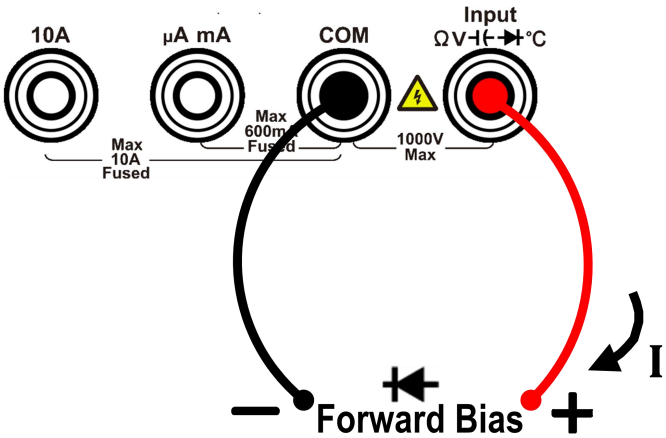

3. **Set the beeper.**
   Press the Beeper softkey to enable or disable the beeper. When the beeper is enabled, the diode is connected, the multimeter will beep continuously.
4. **Diode measurements behave as follows:**

Forward pressure drop of diode	Display and beep
0 to 3 V	Displays measured voltage, and the multimeter beeps when the voltage is below 0.7 V (if beeper enabled)
> 3 V	Displays "Open" with no beep

Measuring Capacitance

This section describes how to configure capacitance measurements.

Operating Steps:

1. **Enable the capacitance measurement.**

   Press ⊣⊢ on the front panel to enter capacitance measurement mode.

2. **Connect the test lead.**

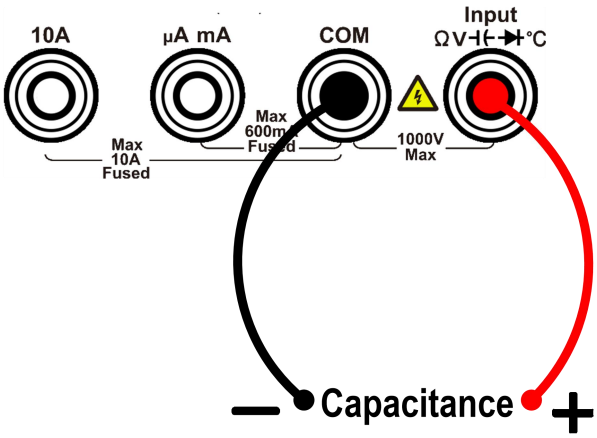

   Tip: Please short contact the two feet of an electrolytic capacitor by using a test lead before measuring the electrolytic capacitor.

3. **Set the range.**

   Press the Range softkey to set the range. Auto range automatically selects the range for the measurement based on the input.

   Note:

   - 1000 V input protection is available in all ranges.
   - 10% over range for all ranges except 50000 μF range.

     If the reading exceeds 50500 μF in 50000 μF range, "overload" will be displayed.

4. **Set the relative value.**

   Press the Rel softkey to turn on or off the relative operation. For relative operation, the multimeter subtracts the pre-specified value of REL operation from the actual measurement result and displays the result. See page 24, *Relative Value*.

Measuring Frequency and Period

When measuring AC voltage or AC current, you can use the dual display function to obtain the measured signal's frequency and period (see page 22, *Dual Display*), or press Freq to measure the frequency or period directly.

This section describes how to configure frequency and period measurements.

Operating Steps:

1. **Enable the frequency/period measurement.**

   Press Freq on the front, in the right menu, press the Mode softkey to switch between Freq and Period measurement.

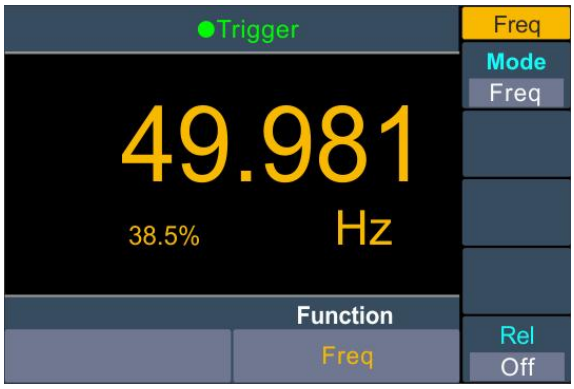

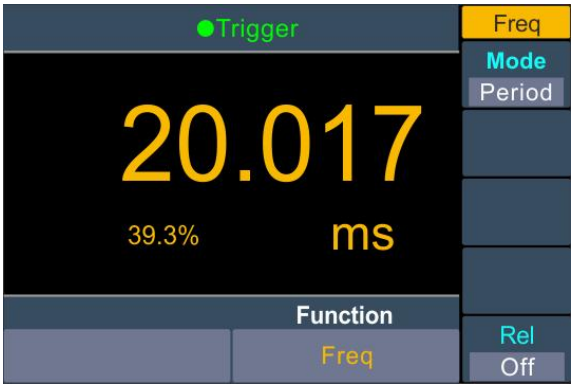

2. **Connect the test lead.**

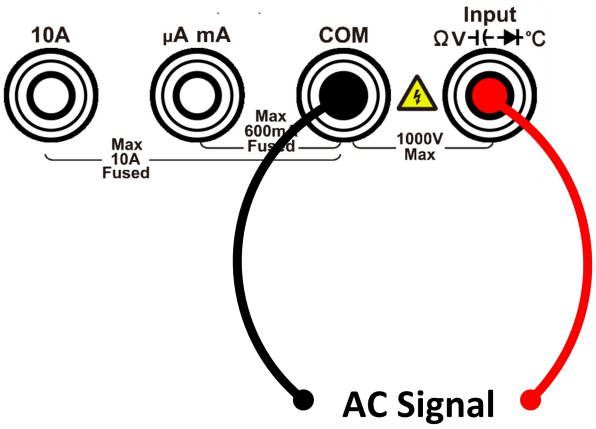

3. **Note**
   - Frequency range: 20 Hz to 60 MHz.
   - 750 V input protection is available in all ranges.
4. **Set the relative value.**

   Press the Rel softkey to turn on or off the relative operation. For relative operation, the multimeter subtracts the pre-specified value of REL operation from the actual measurement result and displays the result. See page 24, *Relative Value*.

Measuring Temperature

This section describes how to configure temperature measurements. Temperature measurements require a temperature transducer probe. The supported probes are ITS-90 K type and Pt100 sensor.

Operating Steps:

1. **Enable the temperature measurement.**

   Press Temp on the front panel to enter temperature measurement mode.

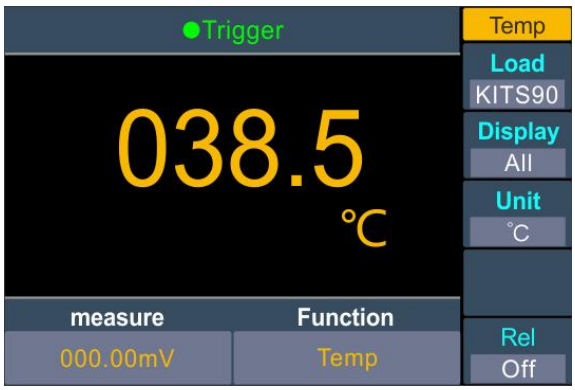

2. **Connect the test lead.**

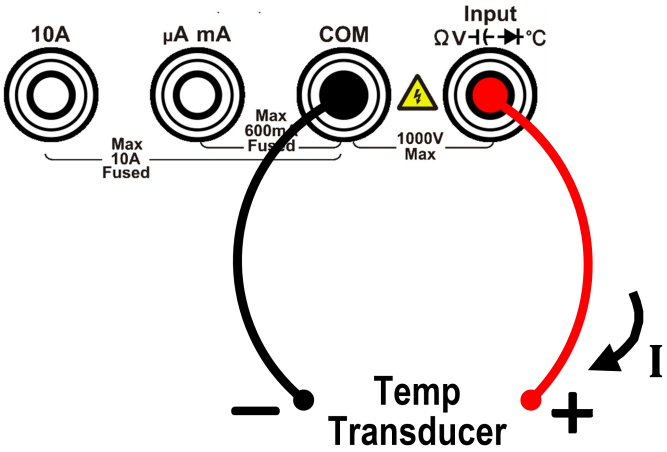

3. **Set the sensor configuration file.**

   Press the Load softkey, choose KITS90 or Pt100.

4. **Set the display.**

   Press the Display softkey to set the display mode of the result.

   Temp: only the temperature value will be displayed;

   measure: only the measurement value will be displayed.

   All: both the temperature value (on the main display) and the measurement value will be displayed.

5. **Set the temperature unit.**

   Press the Unit softkey to display temperature in ℃ (degrees Celsius), ℉ (degrees Fahrenheit), or K (Kelvin).

   The conversion relations between these units are:

   ℉ = (9/5) × ℃ + 32

   K ≈ ℃ + 273.15

6. **Set the relative value.**

   Press the Rel softkey to turn on or off the relative operation. For relative operation, the multimeter subtracts the pre-specified value of REL operation from the actual measurement result and displays the result. See page 24, *Relative Value*.

Dual Display

Using dual display function, you can view the readings of two measurement functions simultaneously.

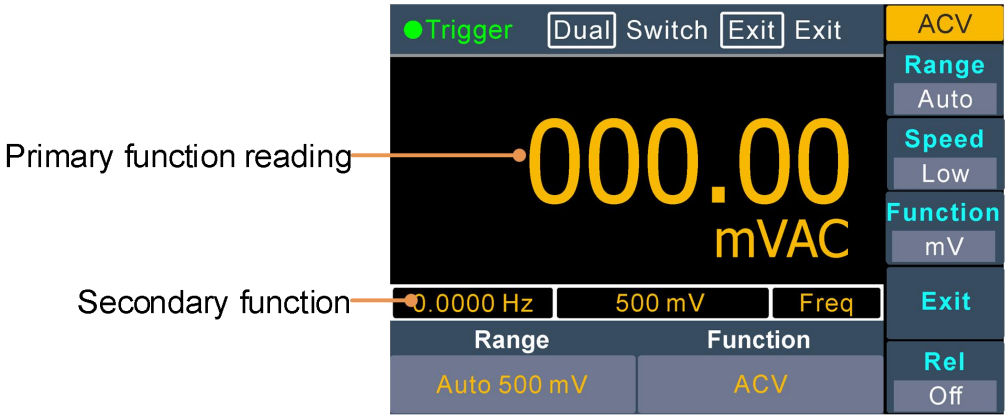

Figure 3- 1 Dual Display

Operating Steps:

1. Press one of the measurement function keys to turn on the primary measurement function.
2. Press Dual on the front panel, the secondary function list is shown on the right menu, select the desired function.
3. When dual display is enabled, press Dual to switch the primary function and the secondary function. To configure the secondary function, you can switch it to the primary function, configure in the right menu, then switch back.
4. Press the Exit softkey to disable the dual display.

The primary measurement functions and their associated secondary measurements are: (gray back color indicates valid combinations)

		Primary measurement function							
		DCV	DCI	ACV	ACI	Freq	Period	RES	CAP
Secondary	DCV								
	DCI								
	ACV								
	ACI								
	Freq								
	Period								
	RES								
	CAP								

Note:

- The multimeter makes the primary and secondary measurements alternately, the primary and secondary readings update respectively.
- If the Max/Min, dB/dBm, or relative value of the math operation is turned on in the main display, the math operation is automatically turned off when dual display is turned on. When dual display is turned on, if the Max/Min, dB/dBm or relative value is turned on, dual display will be automatically turned off.
- When the dual display is enabled, manual record function can save both primary and secondary readings, auto record function can only save the primary reading.

Data Hold

Data hold keeps the current reading on the display.
(1) Press the Run/Stop panel key to stop the trigger, and the current reading is kept on the display screen.
(2) Press the Run/Stop key again to continue triggering.

Math

The multimeter provides these math functions: Max/Min, dB/dBm and relative. Only one operation can be enabled in the Max/Min, dB/dBm, or relative operation.

Max/Min

The Max/Min operation is used to calculate the max, min and average of the readings during the measurement period

Press the front panel Math key, press the MAX/MIN softkey, press the Display softkey to select On.

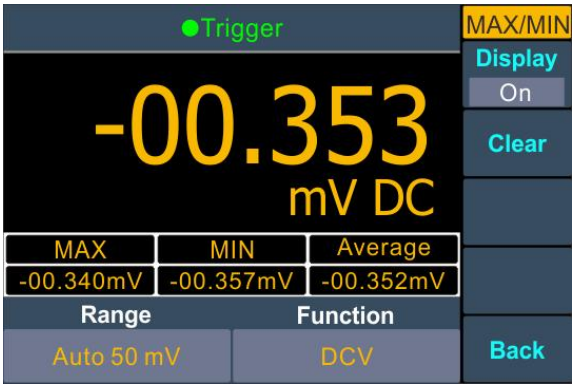

Remarks

- Press the Clear softkey to clear reading memory and restart statistics.

dB/dBm

The dB and dBm scaling functions only apply to ACV and DCV measurements. The functions allow you to scale measurements relative to a reference value.

Press the front panel Math key, press the dB/dBm softkey to access the menu.

Press the Mode softkey to enable or disable the function.

Press the Function softkey to select the operation function as dB or dBm.

- **dBm Function**

dBm function represents the absolute value of the power. The function calculates the power of the reference resistance according to the measured voltage, relative to 1 mW:

$$\mathbf{dBm = 10 \times \log_{10} (reading^2 / reference\ resistance / 1\ mW)}$$

Press the Rel R softkey to select the reference resistance. The value may be 50 (default), 75, 93, 110, 124, 125, 135, 150, 250, 300, 500, 600, 800, 900, 1000, 1200, or 8000 Ω.

- **dB Function**

dB represents the relative value which is used in the relative operation of dBm value. When enabled, the multimeter calculates the dBm value of the reading and subtracts the preset dB from this value and then displays the result:

$$\mathbf{dB = 10 \times Log_{10} (reading^2 / reference\ resistance / 1\ mW) - dB\ preset}$$

Press the Rel R softkey to select the reference resistance. The value may be 50(default), 75, 93, 110, 124, 125, 135, 150, 250, 300, 500, 600, 800, 900, 1000, 1200, or 8000 Ω.

Press the dB Rel softkey to select the relative value. The relative value must be from -120 to +120 dBm (default 0).

Relative Value

When the relative operation is turned on, the reading displayed on the screen in relative operation is the difference between measured and preset values. The value is specific to the present function and will persist even if you leave this function and return to it later.

Reading = Measured value – Preset value

In the measurement function menu, press the Rel softkey to turn on or off the relative operation. When on, the measured value is stored as a reference value.

Data Record Function

Data record function includes manual record and auto record. You can use any or both functions to record the data. Manual and automatic records share a table of data stored in internal storage. The maximum number of recorded points is 1000. After collecting the data, it can be exported to the computer.

Manual record: Press the Record key -> Manual -> Save softkey to save current reading to the DB data.

Auto record: Press the Record key -> Auto softkey, after setting number of readings, sample interval, press the Start softkey to the DB data.

Manual Record

1. **Collect data**: Press the front panel Record key, press the Manual softkey. Press the Save softkey once to save the current reading to the data table by serial number. The icon will show up on the top of the display.

   Note: The measurement function can be switched during manual record. Save only the main display readings.

2. **View the manual record**: Press the front panel Record key, press the Manual softkey to display the data table. Press ▲ or ▼ keys to turn the page.

   Note:
   - When the recording data exceeds the current range, the data will be marked as "overload".
   - When the relative value operation is enabled, the recorded data is still the reading

when the relative value is closed.

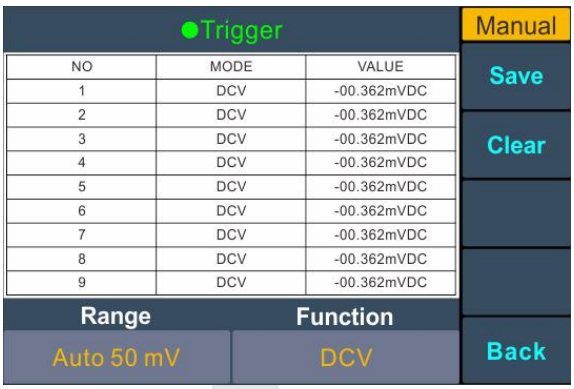

3. **Clear the manual record**: Press the Clear softkey to clear all data in the data table. (Note: because manual and automatic records share the same data table, automatic readings are also erased.).

Auto Record

1. **Configure the parameters**: Press the front panel Record key, press the Auto softkey.

   Press the Point softkey to specify the total number of readings to record. The range is 1 to 1000.

   Press the Interval softkey to specify the time interval between readings. The range is 15 ms to 9999.999 s.

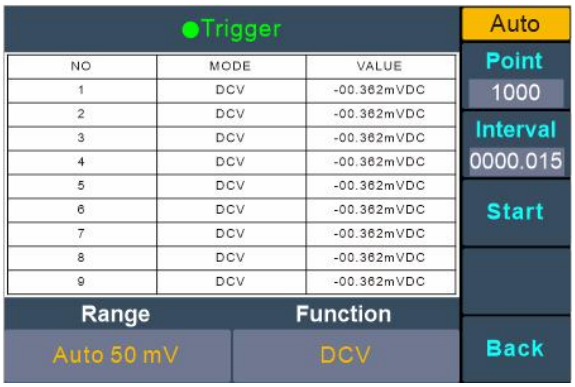

2. **Record data**: Press the Start softkey to start auto record. The icon will show up on the top of the display. Press the End softkey to stop recording, the data table shows the readings taken. Press ▲ or ▼ keys to turn the page.

   Note:
   - Automatic recording function supports switching measurement function.
   - In auto range, the relay switch may cause jitter, the data at this time is invalid. It will last about a few hundred milliseconds, and the data acquired in this period will be marked as "invalid".
   - When the dual display is enabled, only the reading of main display function can be saved.

Utility Menu

You can set the parameters of the system-related functions and port parameters in utility menu.

Press the Utility panel key to view the instrument model, firmware version, serial

number, and checksum.

Language

Press the front panel Utility key, press the Language softkey to switch display languages.

Backlight

Press the front panel Utility key, press the Backlight softkey to adjust the brightness.

Timed shutdown （Only for DC power supply model）

Press the front panel Utility key, and then press the **APO** soft key to set the automatic shutdown time. The selectable time is 0.5h, 1.0h, 1.5h, 2.0h, off (the instrument will not automatically shut down if "off" is selected).

Communication interface settings

Press the front panel Utility key, press the Next softkey to access system setting menu.

Press Serial softkey to access serial setting menu. Press the Baud softkey to select the desired baud rate from 2400, 4800, 9600, 19200, 38400, 57600 or 115200. The default is 115200. Make sure that the baud rate matches that of the computer.

Press the Parity softkey, select the parity from None, Odd or Even. The default is None.

Press the Stop Bits softkey, select the stop bits from 1, 2.

The Data Bits is fixed to 8.

Clock

Press the front panel Utility key, press the Next softkey to access system setting menu.

Press the RTC softkey. The clock menu displays the date and time. The time always uses a 24-hour format (00:00:00 to 23:59:59).

Press the Set softkey to edit the date and time, Press the front panel Range key to move the cursor, press ▲ or ▼ keys to increase or decrease the value. Press the OK softkey to finish the clock setting.

Default

Press the front panel Utility key, press the Next softkey to access the communication interface setting menu.

Press Default to restore the multimeter to factory defaults. The measurement function will be automatically set to DCV.

Factory default settings

Type	Item	Value
Utility	Backlight	100%
Port	Baud	115200
	Parity	None
	Stop Bits	1
	Data Bits	8
Math	Max/Min	Off
	dB/dBm Off/On	Off
	Function	dB
	Rel R	50Ω
	dB Rel	0Ω
Record	Auto	Clear
	Manual	Clear
	Point	100
	Interval	1S
	Auto On/Off	Off
Others	Run/Stop	Run
	Rel	Off
	Beeper	Off
	Threshold	50Ω
	Freq Mode	Freq
	Unit	℃
	Dual	Off
	Display	All
	Load	KITS90
	Mode	DVC
	Range	Auto
	Speed	Low

Power-On Setting

Press the **Utility** panel key, and press the **Next** softkey to enter the next-page system setup menu.

Select **Default** (factory setting) or **Last** (last setting) to define the power-on state.

- **Default:** Parameters revert to factory defaults after power-on.
- **Last:** Parameters revert to the state prior to power-off after power-on.

Parameters retained by Last setting:

1. Measurement rate
2. Buzzer state
3. CONT threshold and DIODE threshold
4. Temperature range display and unit setting
5. Serial port baud rate setting

4. Measurement Tutorial

Loading Errors (DC Voltage)

Measurement loading errors occur when the resistance of the DUT(Device-Under-Test) is an appreciable percentage of the multimeter's input resistance, as shown below.

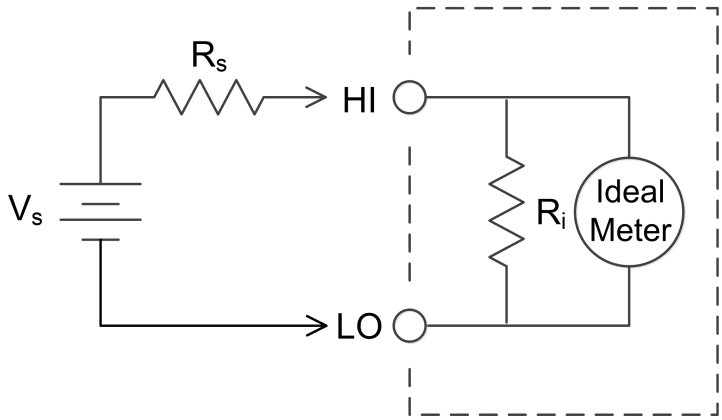

V_s = ideal DUT voltage
R_s = DUT source resistance
R_i = multimeter input resistance

$$\text{Error } (\%) = \frac{100 \times R_s}{R_s + R_i}$$

For the mV range, input impedance⩾ 5 MΩ. For other range, input impedance⩾10 MΩ.

True RMS AC Measurements

The AC measurement of the multimeter has true RMS response. Power dissipated in a resistor is proportional to the square of an applied voltage, independent of the wave shape of the signal. This multimeter accurately measures true rms voltage or current, as long as the wave shape contains negligible energy above the meter's effective bandwidth.

The effective AC voltage bandwidth of the multimeter is 1 kHz, while the effective AC current bandwidth is 1 kHz.

Waveform Shape	Crest Factor (C.F.)	AC RMS	AC+DC RMS
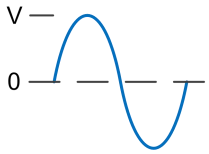	$\sqrt{2}$	$\frac{V}{\sqrt{2}}$	$\frac{V}{\sqrt{2}}$
	$\sqrt{3}$	$\frac{V}{\sqrt{3}}$	$\frac{V}{\sqrt{3}}$
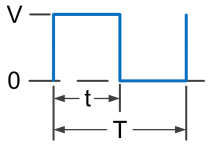 (50% duty cycle)	1	$\frac{V}{C.F.}$	$\frac{V}{C.F.}$

The multimeter's AC voltage and AC current functions measure the AC-coupled true rms value, the RMS value of only the AC components of the input waveform are measured (DC is rejected). As seen in the figure above; for sine waves, triangle waves, and square waves, the AC–coupled and AC+DC values are equal, because these waveforms do not contain a DC offset. However, for non–symmetrical waveforms (such as pulse trains) there is a DC voltage content, which is rejected by the multimeter's AC–coupled true rms measurements.

The AC coupled true RMS measurement is especially useful for measuring small AC signals in the presence of large DC offsets. For example, this situation is common when measuring AC ripple present on DC power supplies. However, there are situations where you might want to know the AC+DC true RMS value. You can determine this value by combining results from DC and AC measurements, as shown below:

$$ac + dc = \sqrt{ac^2 + dc^2}$$

For the best AC noise rejection, you should select "Low" measurement speed to get 5½ digits reading resolution when performing the DC measurement.

5. Troubleshooting

1. The instrument is powered on but no Display.

1) Check if the power is connected properly.
2) Check if the line fuse which is below the AC Mains Input is used appropriately and in good condition (see page 34, *Appendix C: Line Fuse Replacement*).
3) Restart the instrument after the steps above.
4) If the problem still exists, please contact us for our service.

2. The reading does not change when a current signal is input.

1) Check whether the test lead is correctly inserted into the current input terminals.
2) Check whether the DCI or ACI measurement function is enabled.
3) Check whether the DCI measurement function is used to measure AC current.

If you encounter other problems, try to reset the settings, or restart the instrument. If it still cannot work properly, please contact us for our service, and provide your device information. (Press the front panel Utility key)

6. Technical Specifications

Function		Range[1]	Resolution / Frequency range	Accuracy: ± (% of reading + LSB) [2]
DC Voltage		50.000 mV	0.001 mV	0.1% + 10
		500.00 mV	0.01 mV	0.05% + 5
		5.0000 V	0.0001 V	0.05% + 5
		50.000 V	0.001 V	0.05% + 5
		500.00 V	0.01 V	0.1% + 5
		1000.0 V[3]	0.1 V	0.1% + 10
True RMS AC Voltage[4]		500 mV – 750 V	20 Hz – 45 Hz	1% + 30
			45 Hz – 65 Hz	0.5% + 30
			65 Hz – 1 kHz	0.7% + 30
DC Current		500 uA	0.01 uA	0.15% + 20
		5000 uA	0.1 uA	0.15% + 10
		50 mA	0.001 mA	0.15% + 20
		500 mA	0.01 mA	0.15% + 10
		5 A	0.0001 A	0.5% + 10
		10 A[5]	0.001 A	0.5% + 10
True RMS AC Current[6]		500 uA – 500 mA	20 Hz – 1 kHz	0.5% + 20
		5 A – 10 A		1.5% + 20
Resistance[7]		500 Ω	0.01 Ω	0.15% + 10
		5 kΩ	0.0001 kΩ	0.15% + 5
		50 kΩ	0.001 kΩ	0.15% + 5
		500 kΩ	0.01 kΩ	0.15% + 5
		5 MΩ	0.0001 MΩ	0.3% + 5
		50 MΩ	0.001 MΩ	1% + 10
Diode		3.0000 V	0.0001 V	1% + 10
Continuity		1000 Ω	0.1 Ω	Adjustable threshold
Frequency		10.000 Hz – 60 MHz[8]	/	± (0.2% + 10)
Capacitance[9]		50 nF – 500 uF	/	2.5% + 10
		5 mF – 50 mF	/	5% + 10
Temperature	K type[10]	-200 –1300°C	0.1°C	± (1% + 2°C)
	PT100	-200 – 800°C	0.1°C	± (1% + 2°C)
Display		55,000		
Record Interval		15 mS – 9999.999 S		
Record Length		1,000 points		

[1] 10% over range on all ranges, except 1,000 V DCV, 750 ACV, 10 A DCI, 10 A ACI, 50 MΩ resistance, and 50 mF capacitance.

[2] Specifications are for 30-minute warm-up, "Low" measurement rate and calibration temperature 18℃ - 28℃.

[3] For each additional volt over ± 500 VDC add 0.02 mV of error.

[4] Specifications are for amplitude of sine wave input > 5% of range 0.1% errors will be added when the range of input sine wave is 1% to 5%.

[5] 30 seconds OFF after 30 seconds ON is recommend for the continuous current that higher than DC 7 A or AC RMS 7 A.

[6] Specifications are for amplitude of sine wave input > 5% of range. For inputs from 1% to 5% of range, add 0.1% of range extra error.

[7] Specifications are for 2–wire ohms using the relative operation of math. Without relative operation, add ±0.20 Ω additional error in 2-wire ohms function.

[8] Except for special marks, when frequency ≤ 10M Hz, the specification is applicable to >1V AC input voltage, when frequency > 10 MHz, the specification is applicable to >3V AC input voltage.

[9] Specifications are for using the relative operation of math. Using of non-film capacitor may generate additional errors. Specifications are for from 5% to 110% on ranges.

[10] Accuracy is based on ITS-90 relative to the cold junction temperature. The internal cold junction temperature refers to the temperature within the banana jacks, with an accuracy of ±2°C.

General Specifications

Display Screen	3.5-inch TFT LCD with resolution 480*320	
Battery	4400mah, 3.7V Note: It is recommended to use a 5V 2A charger. The XDM1041-U/ XDM1041-R does not have a built-in battery.	
Operating Environment	Full temperature from 0℃ to 50℃, 80% RH and 40℃, non-condensing	
	Storage Temperature: -20℃ to 70℃	
Remote Interface	RS232 or USB Device	
Programmer Language	Standard SCPI, compatible with commands of main stream multimeters	
Warm Up Time	30 minutes	
Dimension (W×H×D)	200 x 86.5 x 64 (mm)	
Weight	XDM1041-U XDM1041-R	Approx. 0.45kg
	XDM1241	Approx. 0.48kg

7. Appendix

Appendix A: Enclosure

Standard Accessories (subject to final delivery)**:**

Quick Guide

Test lead

Crocodile clip

Power Cord
（AC power supply model）

Spare Fuse
（AC power supply model）

USB to DC cable
（DC power supply model）

Appendix B: General Care and Cleaning

General Care

Do not store or leave the instrument where the liquid crystal display will be exposed to direct sunlight for long periods of time.

Cleaning

To clean the instrument exterior, perform the following steps:

1. To prevent electrical shock, shut down the instrument, disconnect the power, and disconnect all test leads before cleaning.
2. Clean the outside of the instrument using a wet soft cloth not dripping water. Do not make any scuffing when cleaning the LCD screen. To avoid damage to the instrument, do not use any corrosive chemical cleaning agent.

Caution: To avoid any damage to the instrument, do not exposed it to any sprays, liquids, or solvents.

⚠ **Warning:** Before power on again for operation, it is required to confirm that the instrument has already been dried completely, avoiding any electrical short circuit or bodily injury resulting from the moisture.

Appendix C: Line Fuse Replacement （Only for AC power supply model）

The line fuse is in the plastic fuse box below the power line input on the rear panel.

Warning: Disconnect the line cord at the rear panel and remove all test leads connected to the instrument before replacing the line fuse. Failure to do so could expose the operator to hazardous voltages that could result in personal injury or death.

Use only the correct fuse type. Failure to do so could result in personal injury or instrument damage.

Voltage	Fuse
90 - 240 V AC	250 V, F1AL

To perform the line fuse replacement, follow these steps:

1. Turn off the multimeter, remove all measurement leads and other cables from the instrument, including the power cord.

2. Use a flat-blade screwdriver to remove the fuse box.

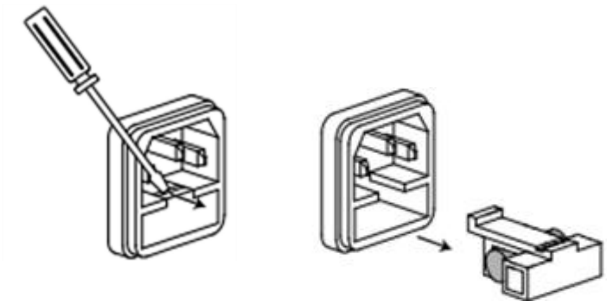

3. Replace the fuse with a new one, install it into the fuse box, and push the fuse box back on to the rear panel.

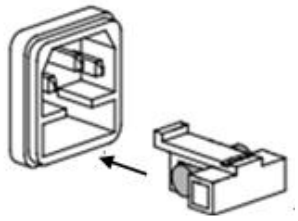

Appendix D: Charging and Replacement of Battery （Only for DC power supply model）

During the long-term storage of the device, the battery may be too low due to the self-discharge of the lithium battery and the device cannot be turned on. This is a normal phenomenon.

Please use the attached adapter to pre-charge the device for 0.5 to 1 hour (depen ding on the storage time) before turning it on. In addition, if the device is not used for a long time, it is recommended to charge it at regular intervals to avoid over-di scharge of the lithium battery.

Battery Charging

The lithium battery may not be fully charged at the factory. To fully charge the battery, it takes about 3 hours to charge (when the device is turned off) or subject to the charging indicator. After charging, the battery can supply power for about 10 hours (varies depending on the working state).
When using battery power, a battery indicator will appear at the top of the screen to show battery usage. The ▯ symbol indicates that there are only about five minutes of usage remaining. To charge the battery and power the instrument, connect the USB to DC cable to charge the battery. Turning off the instrument increases charging speed.

Charging Method

Connect the oscilloscope to an adapter or other device for charging via a USB-to-DC data cable or Type-C interface (pay attention to the load capacity of the power supply device, and an adapter of 2A or greater should be used to prevent the device from working abnormally).

Note

To avoid overheating of the battery during charging, the ambient temperature must not exceed the allowable value given in the technical specifications.

Replacement of Lithium Battery

Generally, the battery does not need to be replaced. However, when necessary, it can only be replaced by qualified personnel, and only **lithium batteries of the same specification** can be used.