OW65 Series Digital Multimeters

User Manual

For product support, visit:www.owon.com.hk/download

※：The illustrations, interface, icons and characters in the user manual may be slightly different from the actual product. Please refer to the actual product.

Feb. 2025 edition V1.0.0

Copyright © LILLIPUT Company. All rights reserved.

The LILLIPUT's products are under the protection of the patent rights, including ones which have already obtained the patent rights and those which are applying for. The information in this manual will replace all that in the materials published originally.

The information in this manual was correct at the time of printing. However, LILLIPUT will continue to improve products and reserves the rights to change specification at any time without notice.

owon® is the registered trademark of the LILLIPUT Company.

Fujian LILLIPUT Optoelectronics Technology Co., Ltd.

No. 19, Heming Road

Lantian Industrial Zone, Zhangzhou 363005 P.R. China

Tel: +86-596-2130430 **Fax:** +86-596-2109272

Web: www.owon.com.cn **E-mail:** info@owon.com.cn

General Warranty

We warrant that the product will be free from defects in materials and workmanship for a period of 1 year from the date of purchase of the product by the original purchaser from our company. This warranty only applies to the original purchaser and is not transferable to a third party.

If the product proves defective during the warranty period, we will either repair the defective product without charge for parts and labour, or will provide a replacement in exchange for the defective product. Parts, modules and replacement products used by our company for warranty work may be new or reconditioned like new. All replaced parts, modules and products become the property of our company.

To obtain service under this warranty, the customer must notify our company of the defect before the expiration of the warranty period. Customer shall be responsible for packaging and shipping the defective product to our designated service centre, a copy of the customer's proof of purchase is also required.

This warranty shall not apply to any defect, failure or damage caused by improper use or improper or inadequate maintenance and care. We shall not be obligated to furnish service under this warranty a) to repair damage resulting from attempts by personnel other than our company representatives to install, repair or service the product; b) to repair damage resulting from improper use or connection to incompatible equipment; c) to repair any damage or malfunction caused by the use of not our supplies; or d) to service a product that has been modified or integrated with other products when the effect of such modification or integration increases the time or difficulty of servicing the product.

Please contact the nearest sales and service offices for services.

Excepting the after-sales services provided in this summary or the applicable warranty statements, we will not offer any guarantee for maintenance definitely declared or hinted, including but not limited to the implied guarantee for marketability and special-purpose acceptability. We should not take any responsibilities for any indirect, special or consequent damages.

Table of Contents

1. Safety Information *1*

Safety Considerations 1

Measurement Category 3

Safety Terms and Symbols 4

2. Quick Start *5*

General Inspection 5

Install the Batteries 5

Adjusting the Tilt Stand 6

Power On/Off 6

Sleep Mode 6

Flashlight 6

Low impedance（Only for V-voltage scale） 7

Multimeter in Brief 8

Front panel 8

Interface 9

Input terminals 10

Measurement Connections 10

Setting menu 12

3. Making Measurements *14*

Measuring AC or DC Voltage 14

Measuring Resistance 15

Testing for Continuity 15

Testing Diodes 16

Measuring Capacitance 17

Measuring Frequency/Duty Cycle 18

Measuring Temperature 19

Measuring DC or AC Current 19

4. The Multimeter Function *21*

Set Range 21

Maximum/Minimum Measurement 21

Relative Measurement 22

Value Hold Mode 22

5. To Connect with Mobile Device *23*
How to Connect 23
User Interface 25
Operations in APP 26
6. Technical Specifications *41*
General Specification **43**
7. Appendix *44*
Appendix A: Enclosure **44**
Appendix B: General Care and Cleaning **44**

1. Safety Information

Safety Considerations

Before any operations, please read the following safety precautions to avoid any possible bodily injury and prevent damage to this product or any other products connected. To avoid any contingent danger, use this product only as specified.

- Limit operation to the specified measurement category, voltage, or amperage ratings.
- **Do not use the multimeter if it is damaged.** Before you use the multimeter, inspect the case. Look for cracks or missing plastic. Pay particular attention to the insulation surrounding the connectors.
- **Do not use the test leads provided for other products.** Use only the certified test leads specified for this product.
- Inspect the test leads for damaged insulation or exposed metal.
- Before use, verify the multimeter's operation by measuring a known voltage.
- Only the qualified technicians can implement the maintenance.
- **Always use the specified battery type.** The power for the multimeter is supplied with a battery. Observe the correct polarity markings before you insert the batteries to ensure proper insertion of the batteries in the multimeter.
- **Check all Terminal Ratings.** To avoid fire or shock hazard, check all ratings and markers of this product. Refer to the user's manual for more information about ratings before connecting to the multimeter.
- Do not operate the multimeter with the cover or portions of the cover removed or loosened.
- **Do not operate if in any doubt.** If you suspect damage occurs to the multimeter, have it inspected by qualified service personnel before further operations.
- **Do not operate this product in wet or damp conditions.**
- **Do not operate in an explosive atmosphere.**
- **Keep product surfaces clean and dry.**
- Do not apply more than the rated voltage (as marked on the multimeter) between terminals, or between terminal and earth ground.
- When measuring current, turn off the circuit power before connecting the multimeter in the circuit. Remember to place the multimeter in series with the circuit.
- When servicing the multimeter, use only the specified replacement parts.
- Use caution when working above 60 V DC, 30 V AC RMS, or 42.4 V peak. Such voltages pose a shock hazard.

- When using the test leads, keep your fingers behind the finger guards on the test leads.
- Remove the test leads from the multimeter before you open the battery cover.
- To avoid false readings, which may lead to possible electric shock or personal injury, replace the battery as soon as the low battery indicator appears and flashes.
- Disconnect circuit power and discharge all high-voltage capacitors before testing resistance, continuity, diodes, or capacitance.
- **Use the proper terminals, function, and range for your measurements.** When the range of the value to be measured is unknown, set the rotary switch position as the highest range, or choose the auto ranging mode. To avoid damages to the multimeter, do not exceed the maximum limits of the input values shown in the technical specification tables.
- Connect the common test lead before you connect the live test lead. When you disconnect the leads, disconnect the live test lead first.
- Before changing functions, disconnect the test leads from the circuit under test.

Measurement Category

The multimeter has a safety rating of 1000 V, CAT III and 600 V, CAT IV.

Measurement category definition

Measurement CAT I applies to measurements performed on circuits not directly connected to the AC mains. Examples are measurements on circuits not derived from the AC mains and specially protected (internal) mains- derived circuits.

Measurement CAT II applies to protect against transients from energy-consuming equipment supplied from the fixed installation, such as TVs, PCs, portable tools, and other household circuits.

Measurement CAT III applies to protect against transients in equipment in fixed equipment installations, such as distribution panels, feeders and short branch circuits, and lighting systems in large buildings.

Measurement CAT IV applies to measurements performed at the source of the low- voltage installation. Examples are electricity meters and measurements on primary over current protection devices and ripple control units.

Safety Terms and Symbols

Safety Terms

Terms in this Manual. The following terms may appear in this manual:

⚠ **Warning:** Warning indicates the conditions or practices that could result in personal injury or death.

⚠ **Caution:** Caution indicates the conditions or practices that could result in damage to this product or other property.

Terms on the Product. The following terms may appear on this product:

Danger: It indicates an injury or hazard may immediately happen.

Warning: It indicates an injury or hazard may be accessible potentially.

Caution: It indicates a potential damage to the instrument or other property might occur.

Safety Symbols

Symbols on the Product. The following symbol may appear on the product:

⎓	Direct current (DC)		Fuse
∼	Alternating current (AC)	⚠	Caution, risk of danger (refer to this manual for specific Warning or Caution information)
≂	Both direct and alternating current	CAT I	Category I overvoltage protection
⏚	Ground terminal	CAT II	Category II overvoltage protection
CE	Conforms to European Union directives	CAT III	Category III overvoltage protection
⧈	Equipment protected throughout by double insulation or reinforced insulation	CAT IV	Category IV overvoltage protection

2. Quick Start

General Inspection

After you get a new multimeter, make a check on the instrument according to the following steps:

1. **Check whether there is any damage caused by transportation.**

   If it is found that the packaging carton or the foamed plastic protection cushion has suffered serious damage, do not throw it away first till the complete device and its accessories succeed in the electrical and mechanical property tests.

2. **Check the Accessories**

   The supplied accessories have been already described in the *Appendix A: Enclosure* of this Manual. You can check whether there is any loss of accessories with reference to this description. If it is found that there is any accessory lost or damaged, please get in touch with our distributor responsible for this service or our local offices.

3. **Check the Complete Instrument**

   If it is found that there is damage to the appearance of the instrument, or the instrument can not work normally, or fails in the performance test, please get in touch with our distributor responsible for this business or our local offices. If there is damage to the instrument caused by the transportation, please keep the package. With the transportation department or our distributor responsible for this business informed about it, a repairing or replacement of the instrument will be arranged by us.

Install the Batteries

The multimeter is powered by three AAA 5V battery.

⚠ **Warning: To avoid false readings, which could lead to possible electric shock or personal injury, replace the battery as soon as the low battery indicator appears.**
Before replacing the battery, turn off the meter, disconnect test leads and any connectors from any circuit under test, remove test leads from the input terminals. Use only the specified battery type.

Use the following procedure to install the batteries.

(1) Ensure that the rotary switch is at the **OFF** position. Remove test leads and any connectors from the input terminals.

(2) Lift the tilt stand and loosen the screws with a suitable Phillips screwdriver and remove the battery cover.

(3) Observe the battery polarity indicated inside the battery compartment, Insert the batteries.

(4) Place the battery cover back in its original position and tighten the screws.

⚠ **Caution:** To avoid instruments being damage from battery leakage, always remove the batteries and store them separately if the multimeter is not going to be used for a long period.

Adjusting the Tilt Stand

Pull the tilt stand outward to its maximum reach (about 85° to the meter body).

Power On/Off

(1) To power ON the multimeter, turn the rotary switch to any other position except **OFF**.

(2) To power OFF the multimeter, turn the rotary switch to the **OFF** position.

Sleep Mode

You can set the sleep time by yourself. If you do not move the rotary switch or any key within the preset time, the multimeter will automatically shut down and enter the sleep state to save battery power.

Pressing **SELECT** or turn the rotary switch will turn the multimeter back to operation mode from the sleep mode.

One minute before Auto Power-off, the buzzer will beep five times to warn. Before shutoff, the buzzer will emit a long beep, and then the multimeter will shut off.

Note: In sleep mode, the multimeter will still consume a little power. If the multimeter is not going to be used for a long period, the power should be turned off.

Flashlight

Pressing open flashlight menu. When press **F1** to select **TORCH** to turn on/off both the front and back flashlights. When press **F2** to select **FRONT** to turn on/off the front flashlight. When press **F3** to select **BACK** to turn on/off the back

flashlight.Press **F4** to select **EXIT** or other functional measures to exit flashlight menu.

Low impedance（Only for V-voltage scale）

⚠ **This function may only be used for voltages of a max. of 1,000 V and a max. of 3 seconds!**

This function enables reducing the measuring impedance from 10 MΩ to 400 kΩ in the voltage measuring range. Through the reduction of the measuring impedance, possible phantom voltages are suppressed, which could falsify the measuring result. Press this button LoZ during voltage measurement (max. 1,000 V!) for a max. of 3 seconds. After release, the multimeter has the normal measuring impedance of 10 MΩ . While the button is pressed, a signal

- It sounds and the display “Loz” appears.

Multimeter in Brief

Front panel

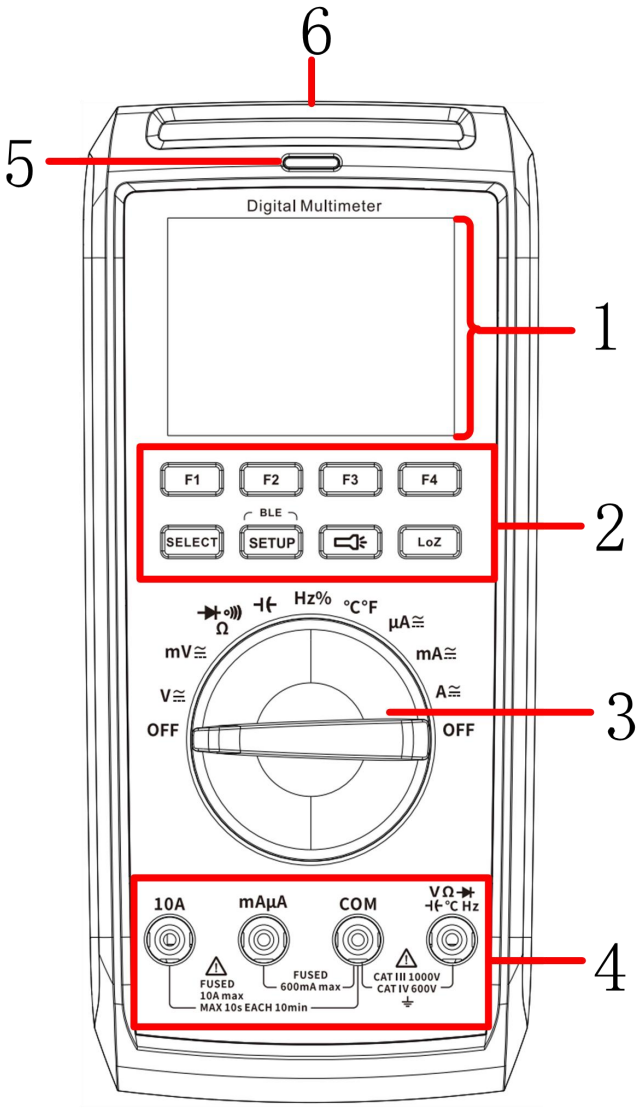

Description:

No.	Description	
1	Display Screen.	
2	Key	**F1~F4**: Menu selection key, press will activate the corresponding menu.
		SELECT: For switching different modes of the same tap in the turntable.
		BLE SETUP: Press it to enter system setting interface.Press and hold to turn on/off the Bluetooth mode.
		: Press it to turn on/off the flashlight.

		LoZ: Press it to enter LoZ mode.
3	Rotary Switch	OFF: Power off.
		V≅ / mV≅: DC or AC voltage measurement.
		Ω: Diode/Continuity/Resistance measurement.
		⊣⊢: Capacitance measurement.
		Hz%:Frequency measurement.
		°C°F: Temperature measurement.
		µA≅ / mA≅ / A≅: DC or AC current measurement.
4	Input terminals.	
5	LED indicator.	
6	Flashlight.	

Interface

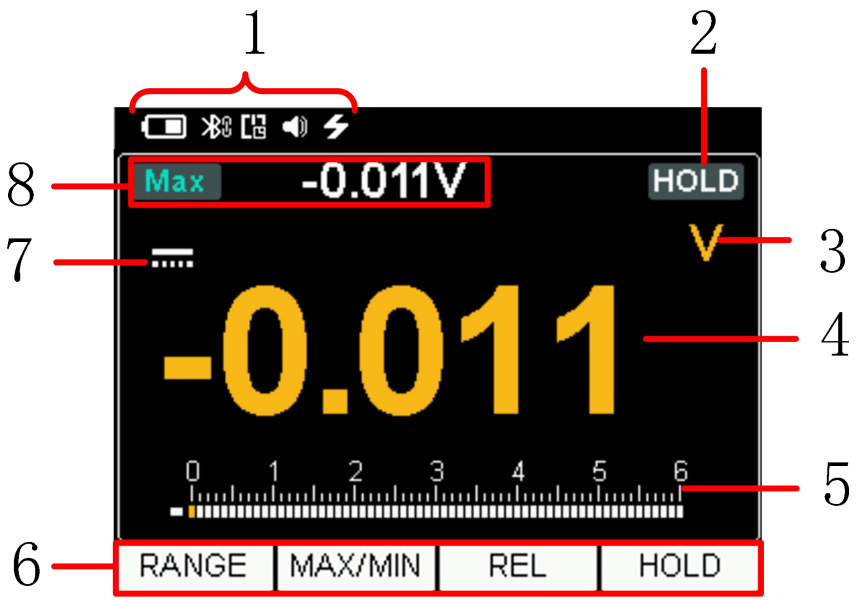

No.	Description
①	From left to right: battery display, Bluetooth on, Bluetooth connection, timer shutdown, buzzer, high voltage prompt
②	Data hold enabled
③	Display unit of measurement
④	Display measured value
⑤	Analog range bar
⑥	Measurement menu
⑦	DC or AC mode
⑧	Maximum/Minimum value

Input terminals

The terminal connections for the different measurement functions of the multimeter are described in the table below.

Measurement Function	Input Terminals		Overload Protection
V≅ or mV≅	VΩ⊣▶ ⊣⊢°C Hz	COM	1000 VAC/1000 VDC
⊣▶ •))) Ω	VΩ⊣▶ ⊣⊢°C Hz	COM	1000 VAC/300 VDC
Hz%			
⊣⊢			
°C/°F			
µA≅ or mA≅	mAµA	COM	600mA/1000V fast-acting fuse
A≅	A	COM	10A/1000V fast-acting fuse

⚠ **Warning: Before starting any measurement, observe the rotary switch position of the multimeter, and then connect the test leads to the correct terminals.**

⚠ **Caution:** To avoid damaging the multimeter, do not exceed the rated input limit.

Measurement Connections

After selecting the desired measurement function, please connect the signal (device) under test to the oscilloscope meter according to the method below. To avoid instrument damage, do not discretionarily switch the measurement function when measuring.

DC Voltage Measurement

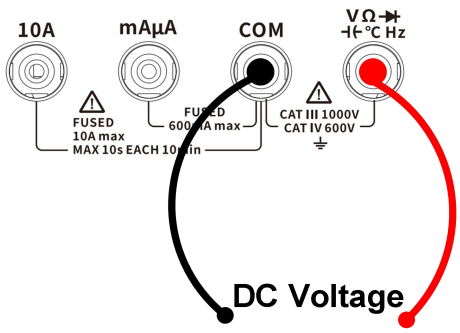

AC Voltage Measurement

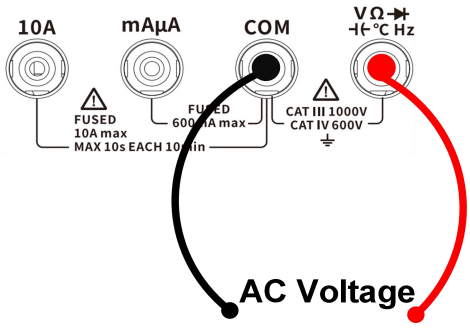

DC Current Measurement

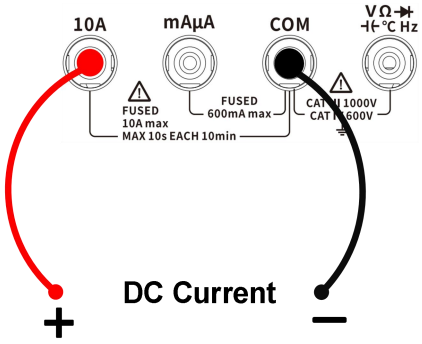

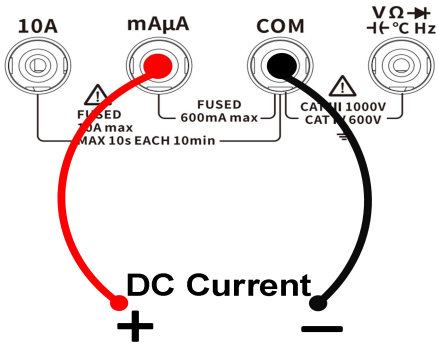

AC Current Measurement

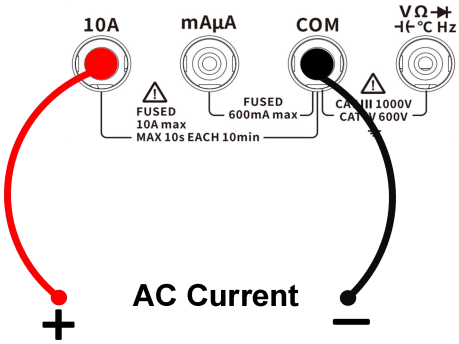

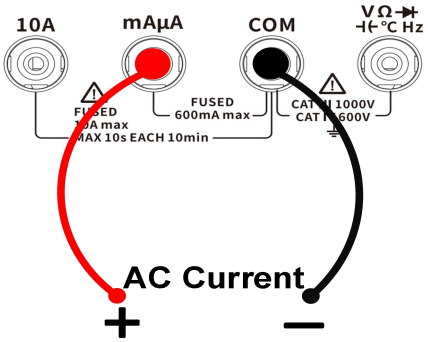

Resistance Measurement

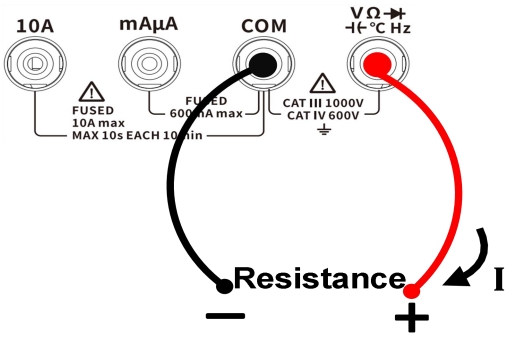

Continuity Test

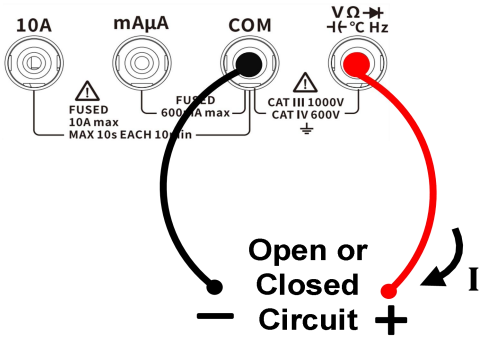

Diode Measurement

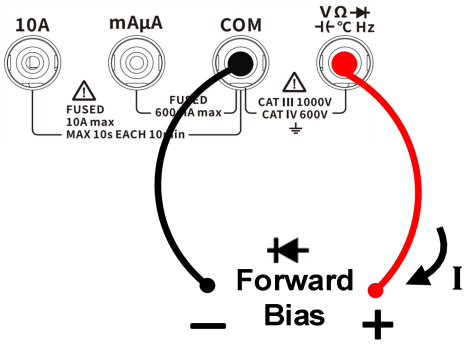

Capacitance Measurement

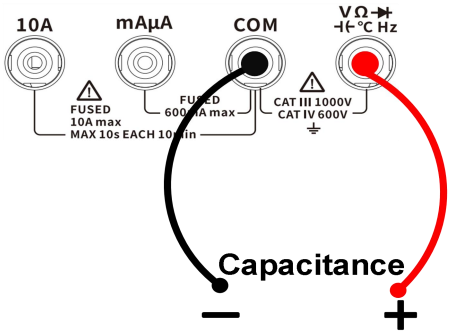

Frequency Measurement

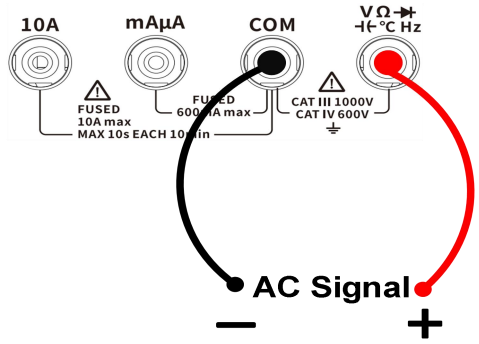

Temperature Measurement

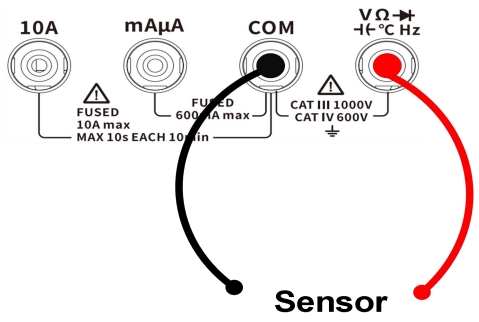

Setting menu

Press the **SETUP** button to enter the settings menu. The user can switch menus using the **F1** or **F2** buttons, and set the desired values using the **F3** or **F4** buttons. After completing the settings, press the **SETUP** button again or rotate the knob to any position to save the settings and exit the settings menu.
Note: Functions may vary slightly between models. Please refer to the actual instrument.

Menu	Description
Brightness	Set the background brightness of the LCD. Press the F3 or F4 key to select the background brightness (HIGH & MIDDLE & LOW).
Sound	Set the buzzer switch. Press F3 or F4 button to enable or disable the buzzer. When the buzzer is on, the value can be increased or decreased. Press the < & > button to switch or value.
Color Mode	Set the screen color. Press the F3 or F4 button to select DARK or LAGHT for screen display.
Auto Power Off	Set the automatic shutdown time. The user can adjust the automatic shutdown time through the key of the menu bar. If there is no rotation or pressing any key within the preset time, the instrument will automatically shut down to reduce the power loss. Press the F3 or F4 button to select the number of minutes for the automatic shutdown time (5&10&15&30&Always ON).
Torch Light	Set the flashlight off time. Press the F3 or F4 button to select the number of minutes for which the flashlight is turned off (1&2&5&10& Always ON).
Factory Reset	Factory reset.
Device Info	View device information. Press the F3 or F4 key to turn on or off device information. Model&Version&Build can be viewed when it

	is turned on.

3. Making Measurements

Measuring AC or DC Voltage

Warning: Do not measure any voltage of over 1000 Vdc or 750 Vac rms to avoid instrument damage or electric shock.
Do not apply more than 1000 Vdc or 750 Vac rms between the common terminal and the earth ground to avoid instrument damage or electric shock.

This multimeter displays DC voltage values as well as their polarity. Negative DC voltages will display a negative sign on the left of the display.

(1) Rotate the rotary switch to V≅ or mV≅ . Default is DC measurement mode, ⎓ will be displayed. Press SELECT to switch into AC measurement mode, ∼ will be displayed.

(2) Connect the black test lead to the COM terminal and the red test lead to the VΩ⊣⊢ ⊣⊢°C Hz terminal.

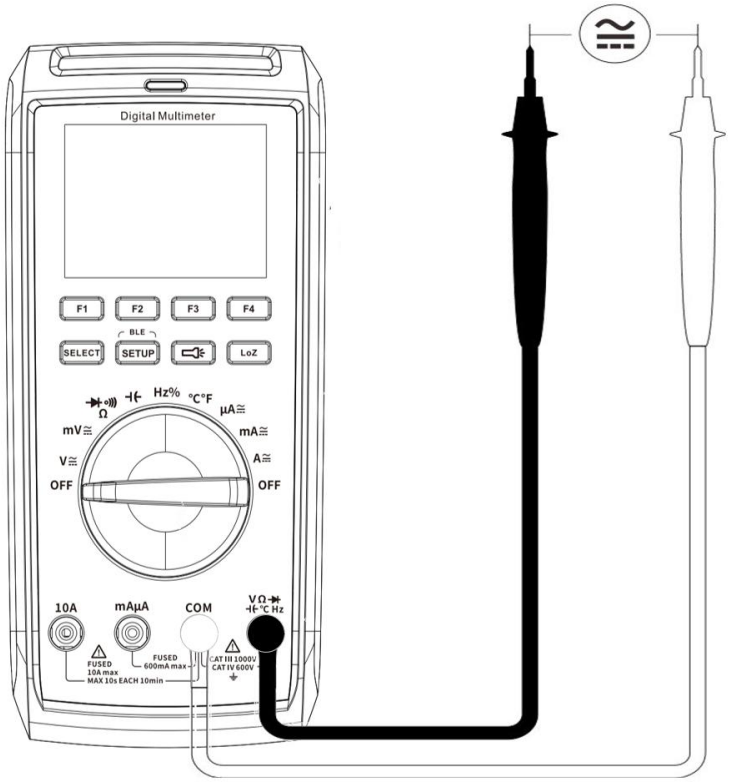

(3) Probe the test points and read the display. Press F1 to enable and cycle through the manual ranges.

Measuring Resistance

Caution: To avoid possible damage to your multimeter or to the equipment under test, disconnect the circuit power and discharge all high-voltage capacitors before measuring resistance.

(1) Rotate the rotary switch to Ω.

(2) Connect the black test lead to the COM terminal and the red test lead to the VΩ⊣⊢ ⊣⊢°C Hz terminal.

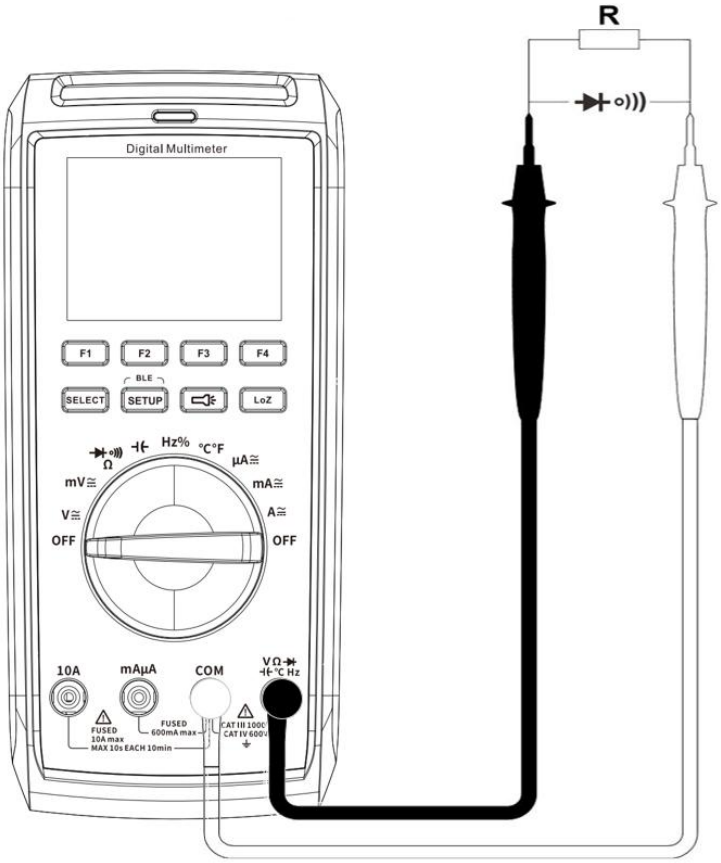

(3) Probe the test points and read the display. Press Press F1 to enable and cycle through the manual ranges.

Testing for Continuity

Caution: To avoid possible damage to your multimeter or to the equipment under test, disconnect the circuit power and discharge all high-voltage capacitors before testing for continuity.

(1) Rotate the rotary switch to Ω. Press SELECT once to enter continuity

testing mode, ◦))) will be displayed.

(2) Connect the black test lead to the COM terminal and the red test lead to the VΩ→+ ⊣⊢°C Hz terminal.

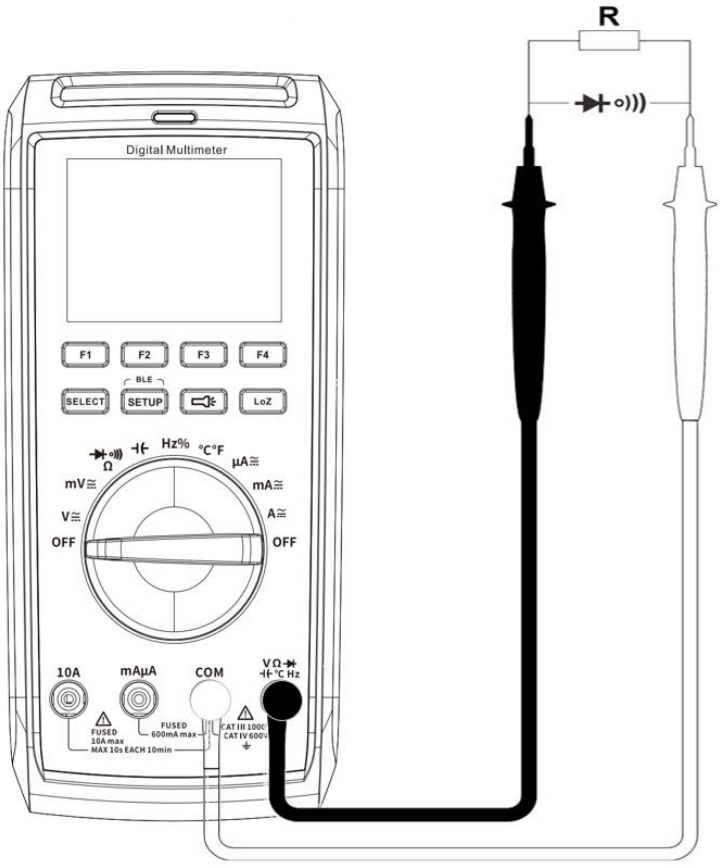

(3) Probe the test points to measure the resistance in the circuit. If the reading is below setting value, the multimeter will beep continuously.

Testing Diodes

⚠ **Caution:** To avoid possible damage to your multimeter or to the equipment under test, disconnect the circuit power and discharge all high-voltage capacitors before testing diodes.

(1) Rotate the rotary switch to →+ ◦))) Ω. Press SELECT twice to enter diode testing mode, →+ will be displayed.

(2) Connect the black test lead to the COM terminal and the red test lead to the VΩ→+ ⊣⊢°C Hz terminal.

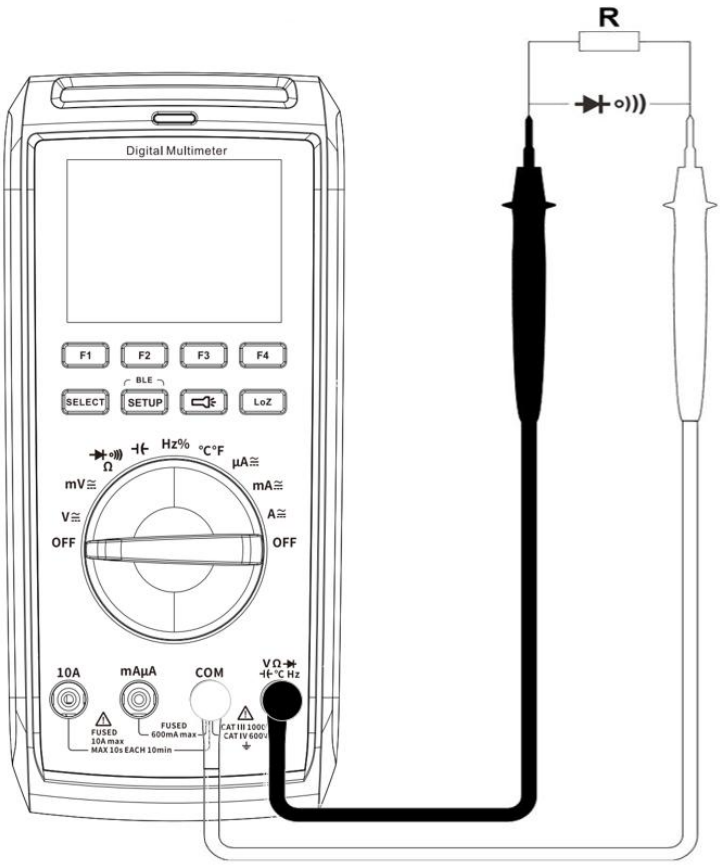

(3) Connect the red test lead to the positive terminal (anode) of the diode and the black test lead to the negative terminal (cathode). The cathode of a diode is indicated with a band.

(4) Read the diode forward bias. If the test lead connection is reversed, the multimeter will display "OL".
Note: when the measured diode voltage is less than 0.2V, judge the diode breakdown , the buzzer issued a "beep beep" alarm sound.

Measuring Capacitance

⚠ **Caution:** To avoid possible damage to the multimeter or to the equipment under test, disconnect circuit power and discharge all high-voltage capacitors before measuring capacitance. Use the DC voltage function to confirm that the capacitor is fully discharged.

(1) Rotate the rotary switch to ⊣⊢.

(2) Connect the black test lead to the **COM** terminal and the red test lead to the **VΩ⊣⊢ °C Hz** terminal.

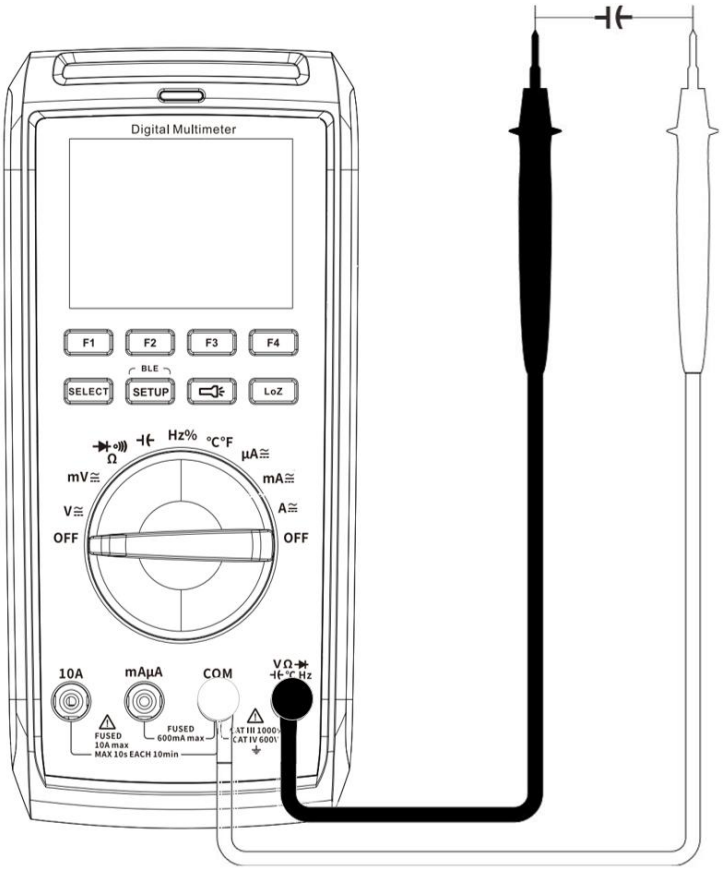

(3) Probe the test points and read the display.

Measuring Frequency/Duty Cycle

(1) Rotate the rotary switch to **Hz%** .

(2) Connect the black test lead to the **COM** terminal and the red test lead to the **VΩ ⊣⊢ °C Hz** terminal.

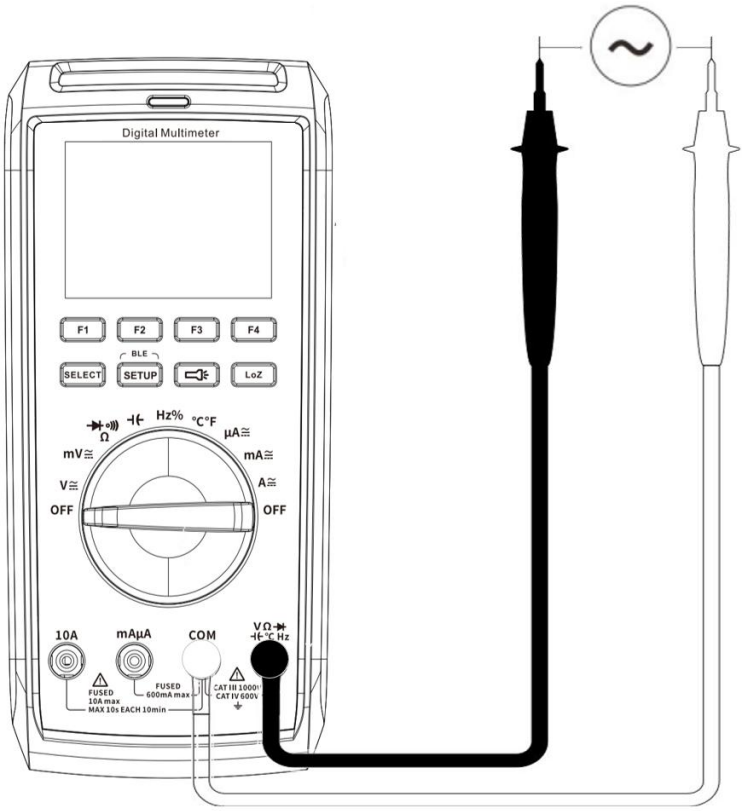

(3) Probe the test points and read the display.

(4) Press SELECT to switch between the frequency and duty cycle measurements.

Note: To measure the frequency of signal with large amplitude, it is recommended to press **FREQ** to measure the frequency in AC voltage measurement mode.

Measuring Temperature

Any K-type thermosensor may be used for measuring temperatures. The temperature can be displayed in °C or °F. Optional sensors can be used for the complete measuring range (-40 to +400 °C).Optional sensors can be used for the complete measuring range (-40 to +1000°C).

(1) Rotate the rotary switch to **℃/℉**.

(2) Connect the **red connection** of the K-type thermocouple to the VΩ ⊣⊢ °C Hz terminal and the **black connection** to the **COM** terminal.

(3) Probe the test points and read the display.

Measuring DC or AC Current

⚠ **Warning:** Never attempt an in-circuit current measurement where the open-circuit potential to earth is greater than 250 V. Doing so will cause damage to the multimeter and possible electric shock or personal injury.

⚠ **Caution:** To avoid possible damage to the multimeter or to the equipment under test, check the multimeter's fuse before measuring current. Use the proper terminals, function, and range for your measurement. Never place the test leads in parallel with any circuit or component when the leads are plugged into the current terminals.

(1) Turn off the power of the measured circuit. Discharge all high-voltage capacitors.

(2) Connect the black test lead to the **COM** terminal. For currents below 600 mA, connect the red test lead to the **mAμA** terminal; for currents within 600 mA – 10 A, connect the red test lead to the **10A** terminal.

(3) Rotate the rotary switch to the appropriate position according to the measurement range, **μA≅**, **mA≅**, or **A≅**.

(4) Disconnect the circuit path to be tested. Connect the black test lead to one side of the circuit (with a lower voltage); connect the red test lead to the other side (with a higher voltage). Reversing the leads will produce a negative reading, but will not damage the multimeter.

(5) Select DC or AC measurement mode. Default is DC measurement mode, will be displayed. Press SELECT to switch into AC measurement mode, will be displayed.

(6) Turn on the power of the measured circuit, and read the display. Press Press F1 to enable and cycle through the manual ranges. If "OL" is displayed, it indicates the input exceeds the selected range and the rotary switch should be set to the position with higher range.

(7) Turn off the power of the measured circuit and discharge all high-voltage capacitors. Remove the test leads and restore the circuit to the original condition.

Note: When measuring mA current: Press "<" or ">" to switch to 4-20mA for current measurement; In 4~20mA file: when the pen is connected, the display is negative, without maxmin and REL functions.

4. The Multimeter Function

The following functions are explained using the voltage range as an example. Please refer to the voltage measurement mode for other measurement modes.

Set Range

1. Rotate the rotary switch to V≅ or mV≅.
2. Press **SELECT** to switch to the DC voltage measurement mode.
3. Press **F1** to select **RANGE** will enter manual range mode. Press **F1** multiple times to switch range.

Maximum/Minimum Measurement

1. Rotate the rotary switch to V≅ or mV≅.
2. Press **SELECT** to switch to the DC voltage measurement mode.
3. Press **F2** to select **MAX/MIN**.
4. Pressing the **F2** once, the **MAX** icon and the current measurement appear at the top left of the screen, and the maximum value remains on the screen. Press **F2** again to switch to **MIN** measurement, the MIN icon and the current measurement value appear at the top left of the screen, and the minimum value remains on the screen.

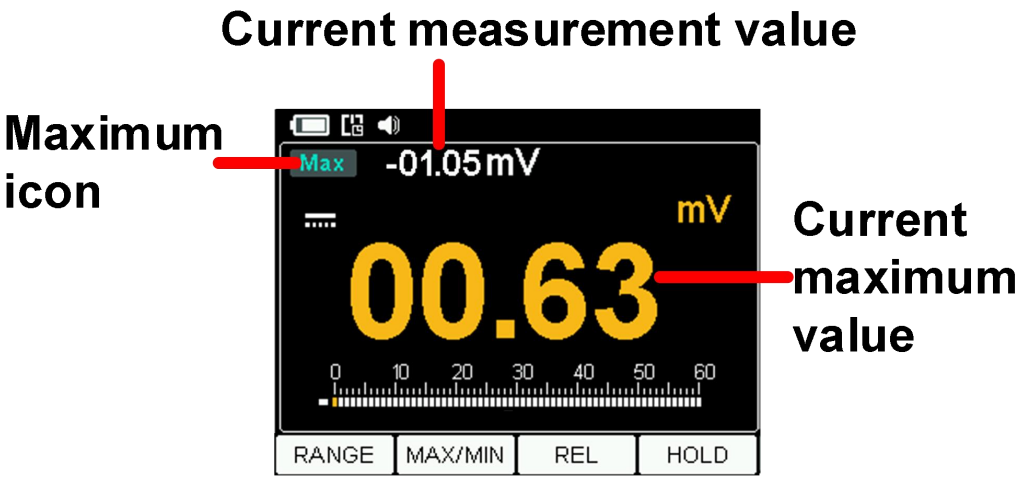

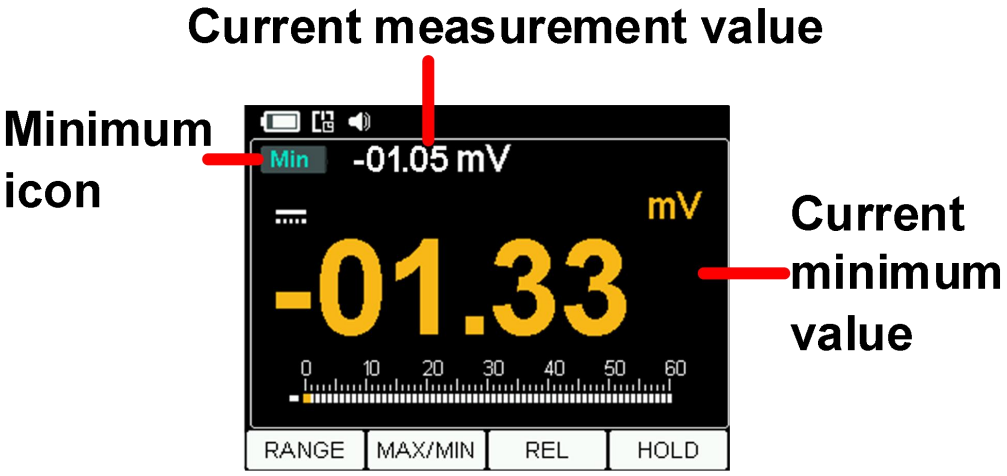

Relative Measurement

When making relative measurements, reading is the difference between a stored reference value and the input signal.

1. Rotate the rotary switch to V≅ or mV≅.
2. Press **SELECT** to switch to the DC voltage measurement mode.
3. Press **F3** to select **REL**, Rel appears at the top left of the screen. The measurement value when pressing **F3** as the reference value. In this mode, current reading = input value - reference value.

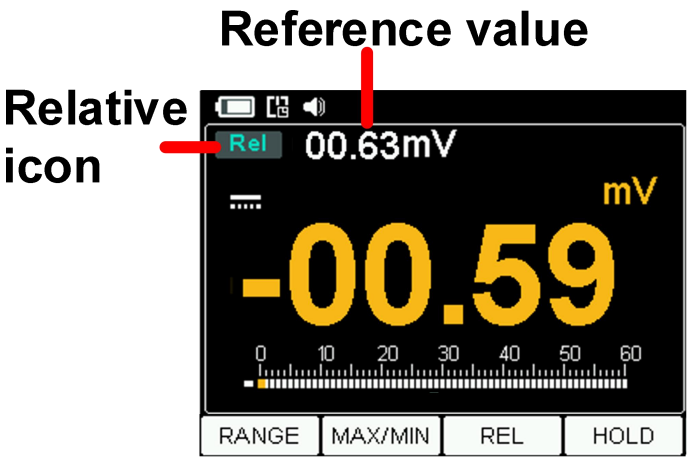

4. Press **F3** again to exit the mode.

Value Hold Mode

The value hold mode keeps the current reading on the display.

1. Rotate the rotary switch to V≅ or mV≅.
2. Press **SELECT** to switch to the DC voltage measurement mode.
3. Press **F4** to select **HOLD**, HOLD appears at the top right of the screen. The current reading will be maintained.

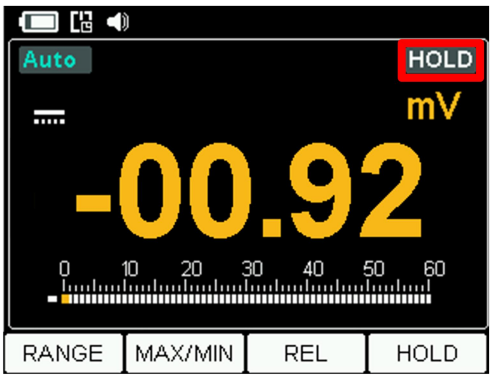

4. Press **F4** again to exit the mode.

5. To Connect with Mobile Device

Bluetooth model supports communications with Android or iOS based smart device through Bluetooth. You can use the free application software on the smart devices to monitor the measurements, perform remote control, view trending graphs, etc. The recorded data can be saved as CSV file. The maximum number of record that can be stored depends on the free storage space in your smart device. More than one meters can be connected simultaneously.

Note: Bluetooth connectivity works over a range of about 7 to 8 meters. The work range is much longer in open-sided and non-occluded wide range environment, even up to 20 meters.

How to Connect

(1) On the mobile device, scan the QR code below and follow the instructions to install the free multimeter app.

(2) Open the installed application on your mobile device.

(3) Turn on the multimeter, press and hold

until ✱ appear on the display.

(4) Click on **"Device List"** in the bottom navigation bar.

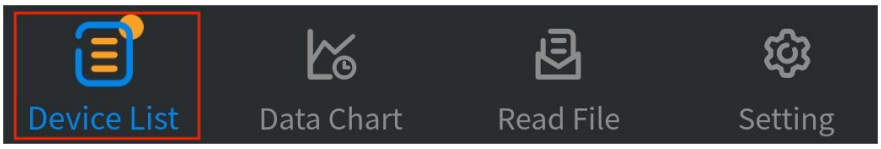

(5) Click the **"+"** icon in the upper left corner to begin searching for devices and list out the multimeters found.

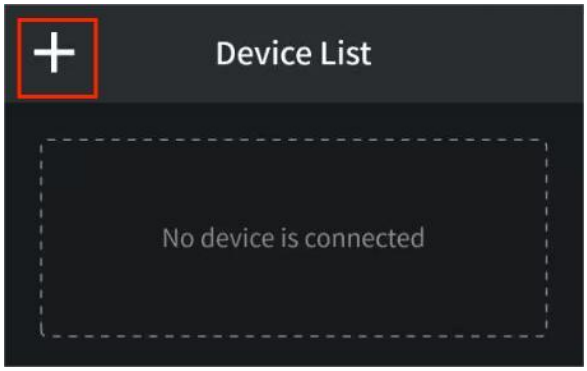

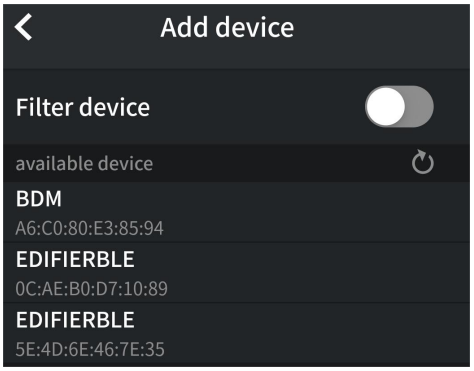

(6) If the Bluetooth of the mobile device is not enabled, a prompt box will pop up at the bottom, indicating **"Bluetooth is not turned on"**. You need to manually open the Bluetooth of the mobile device before connection can be made.

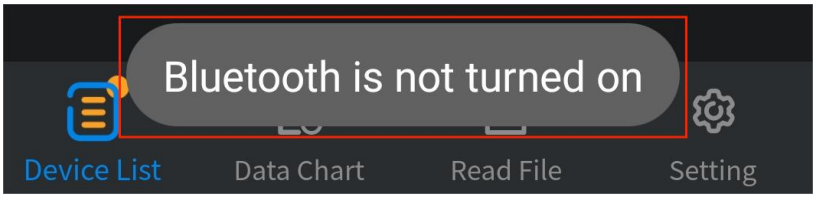

(7) Active **"Filter device"** to hide incompatible multimeters.

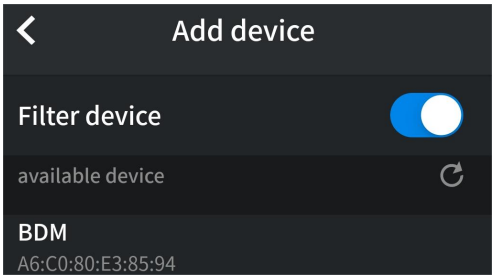

(8) After **"BDM"** appears in the list of available devices, click and select to connect it to the mobile device.

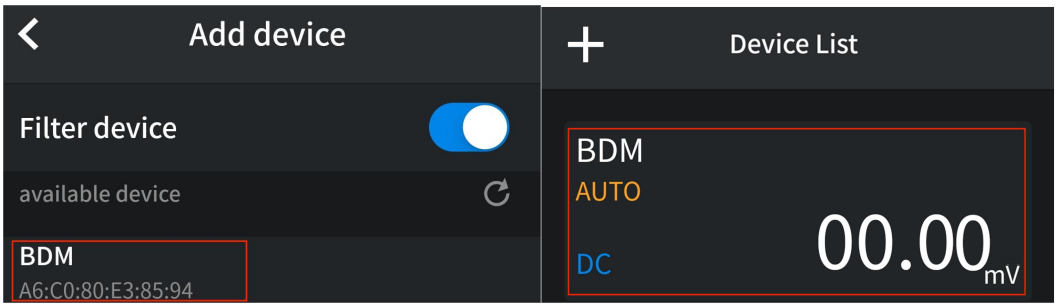

User Interface

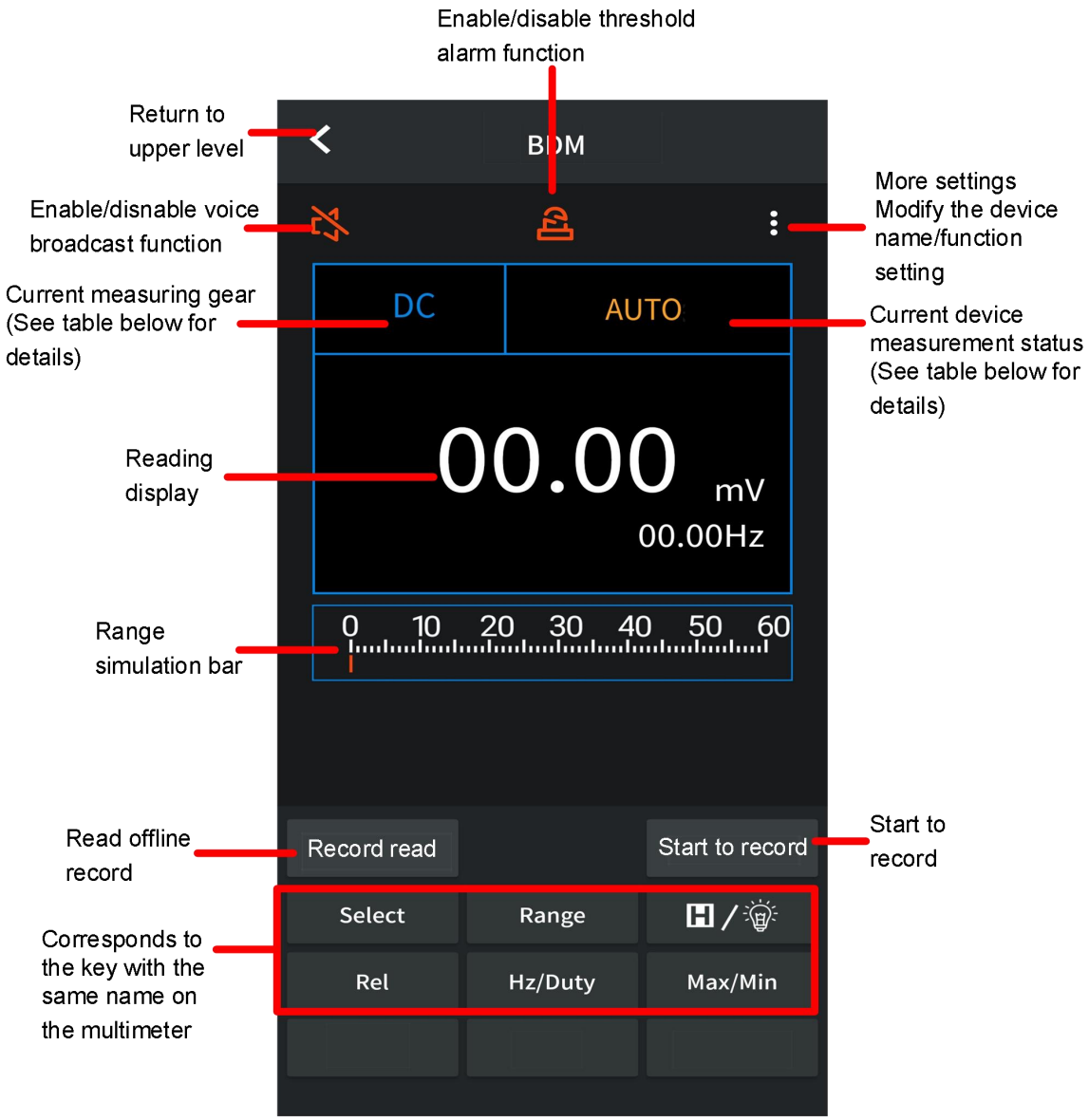

Function Description Table

Display	Function
DC	Direct Current
AC	Alternating Current
RES	Measuring Resistance
DIODE	Testing Diodes
CONT	Testing for Continuity

Display	Function
CAP	Measuring Capacitance
Hz	Measuring Frequency
DUTY	Measuring Duty Cycle
TEMP	Measuring Temperature

Operations in APP

- **Customize the meter name**

The device name of meter can be customized. Click ⋮ in the upper right

corner of the single-view screen.

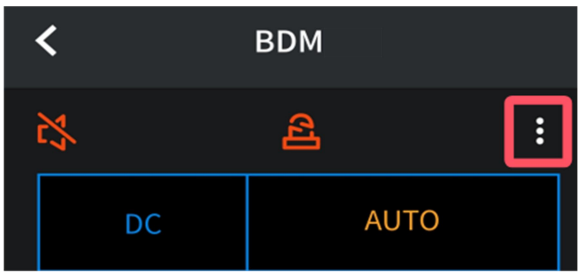

Go to the “More settings” interface.

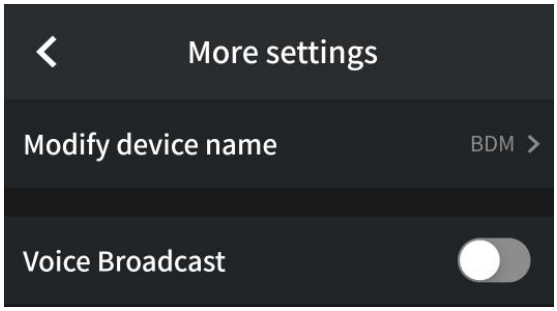

Click the “Modify device name”.

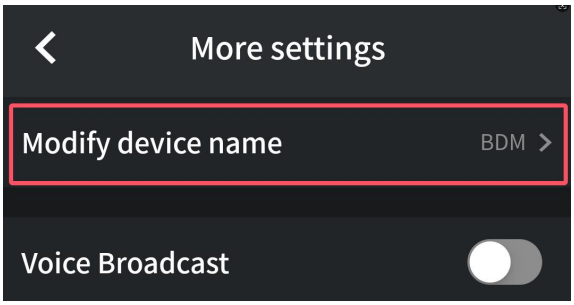

Go to “Modify device name”interface,enter a user-defined device name.

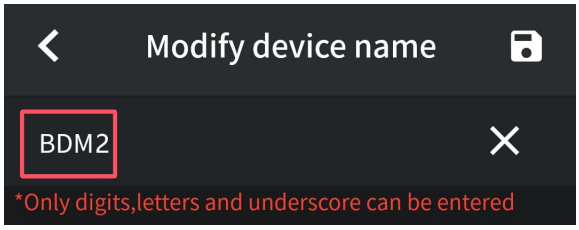

Click the save icon in the upper right corner of the page to modify the device name.

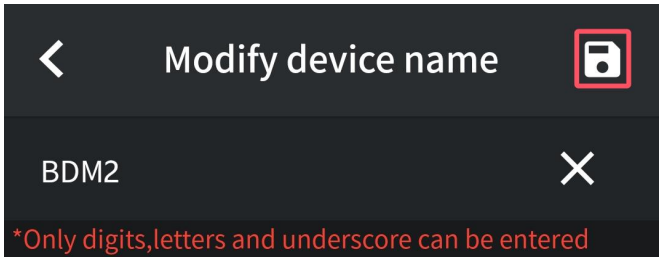

- **Voice out function:** Click in the upper left corner of the single view

screen or ⋮ in the upper right corner to enter more Settings and enable or disable voice broadcast.

- **Alert**: In setting interface, you can enable the alert notification, and set the upper/lower limit. APP will alert for any out-of-limit event.

Click ⋮ in the upper right corner of the single-view screen

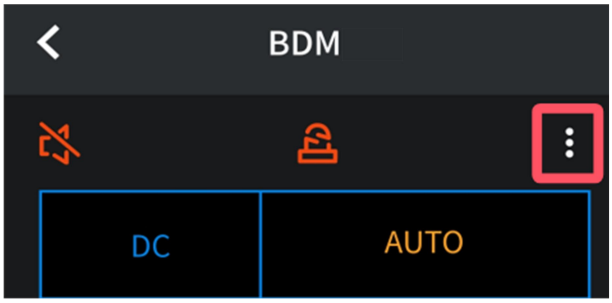

Go to the “More settings” interface.

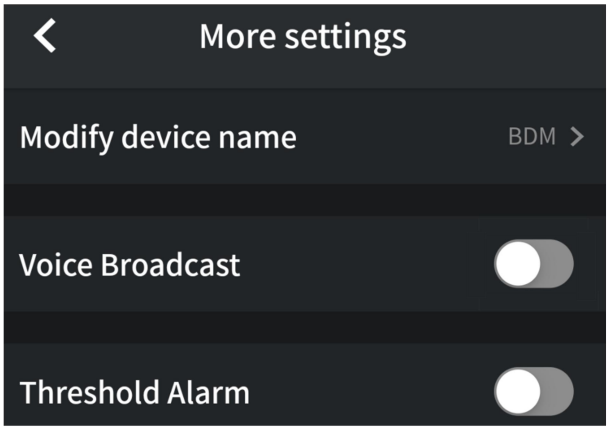

Click "Threshold Alarm" to enable/disable this function.

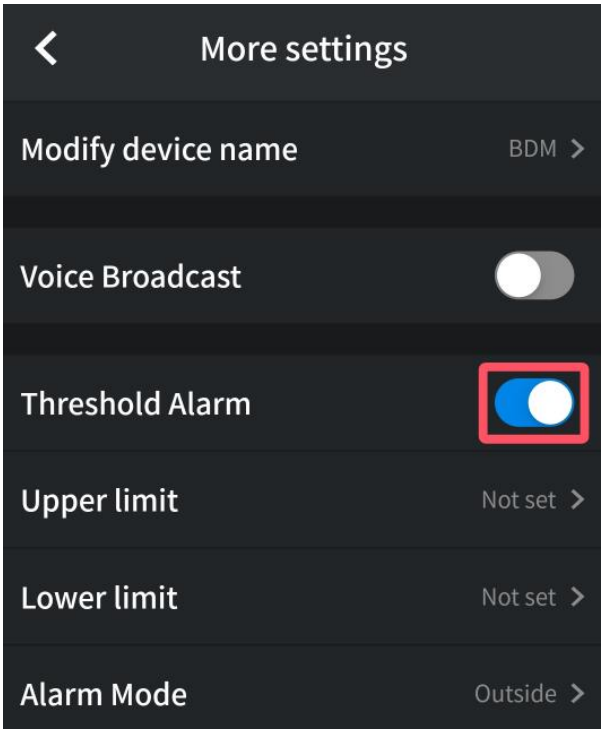

Click to set the required value and mode of "Upper limit, Lower limit, Alarm Mode" (within range & Outside range).

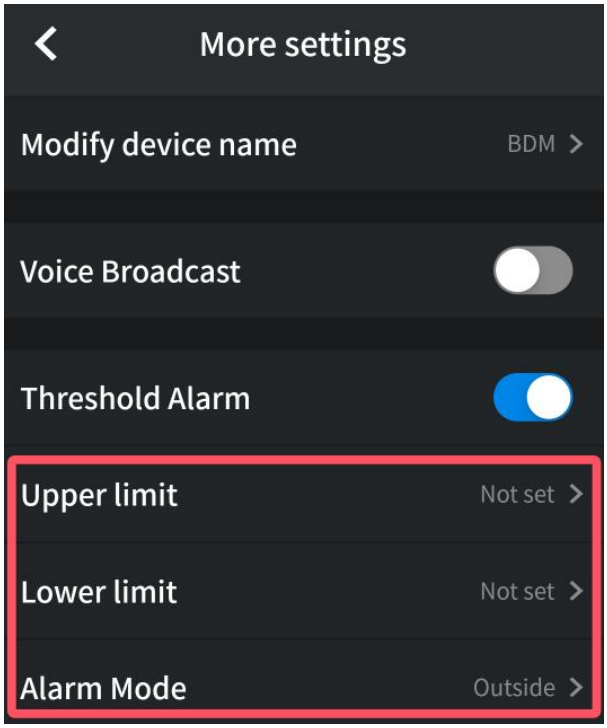

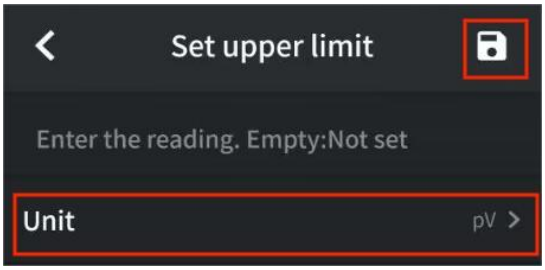

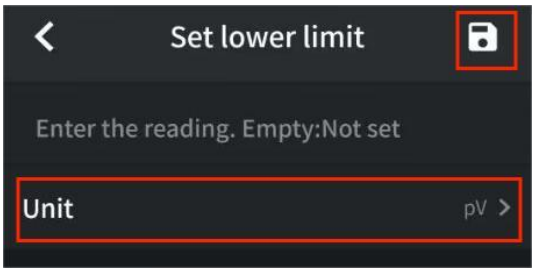

Click on**"Alarm Mode"**and select a range condition：

- **"Inside":** sound alarm if reading falls within the lower and upper limit；
- **"Outside":** sound alarm if reading falls outside the upper or lower limit.

After selecting,click on**"Save"**,the range condition is set.

Description：The upper and lower limits can be set separately without setting both conditions. Here is an example：

- Set the upper limits to 1V, the alarm mode is Outside: The alarm is triggered when the reading is greater than 1V, and the alarm is not triggered when the reading is less than or equal to 1V;
- Set the upper limits to 1V, the alarm mode is Inside: The alarm is triggered when the reading is less than 1V, and the alarm is not triggered when the reading is greater than or equal to 1V;
- Set the lower limits to 1V, the alarm mode is Outside: The alarm is triggered when the reading is less than 1V, and the alarm is not triggered when the reading is greater than or equal to 1V;
- Set the lower limits to 1V, the alarm mode is Inside: The alarm is triggered when the reading is greater than 1V, and the alarm is not triggered when the reading is less than or equal to 1V.

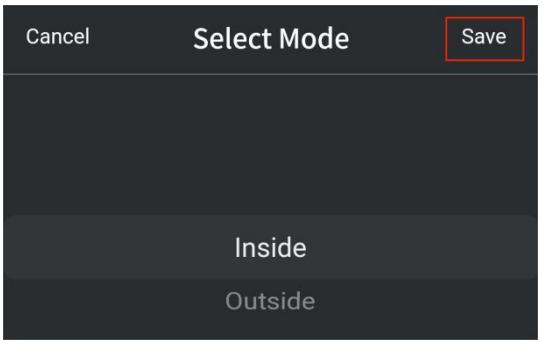

● Multimeter Offline Record

When measuring with BDM, you can use device APP to send a command, the multimeter will start recording the measurements. After receiving the command, the connection will be disconnected automatically. The multimeter will record the measuring data in its own memory. After completion of the record, use Android APP to reconnect the multimeter, and then you can read the measuring data into the Android device as a ZIP file. You can use this function to record for a long time without staff on duty, while reducing Bluetooth consumption to conserve the battery power of the multimeter.

Note: When the low battery indicator appears on the meter screen, the offline record function may not work correctly. Please check the batteries of the meter to ensure them in a good state.

(1) Connect the device with the multimeter, see "*How to Connect* " on P23.

(2) In APP view, tap on the " Start to record " icon on the lower right, enter the read record interface. On the interface click on "Start to record".

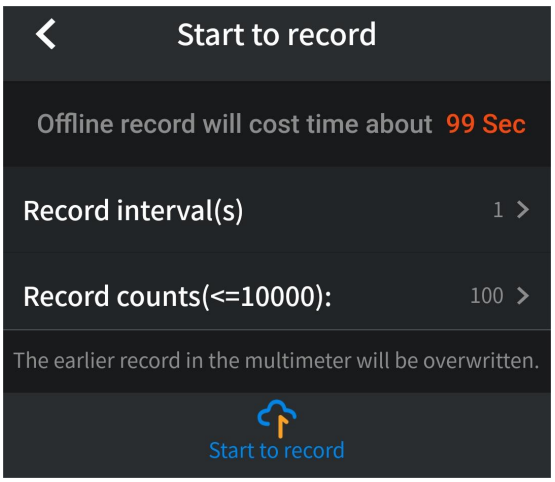

(3) Set "Record interval" and "Records count" (maximum records count is 10,000). Tap on Start to record. The memory in the multimeter can only store the recording data of one time . When start to record, the earlier offline record stored in the multimeter will be overwritten.

The mobile device will disconnect with the multimeter in two seconds. After disconnecting, the information "**BDM disconnected.**" will be shown on APP. The multimeter will record the current measurements and store in the memory.

Note: If the multimeter is in the process of recording data and not finished yet, connect the Mobile device and the multimeter, a dialog box will pop up:

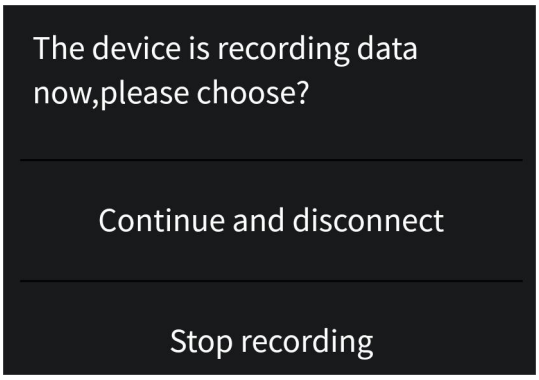

Select Stop recording, the recording process will be interrupted. The Mobile device will connect with the multimeter to read data.

Select Continue and disconnect, the multimeter will continue recording, the connection will be aborted.

(4) After completion of the record, to read the measuring data, reconnect the mobile device and the multimeter.

(5) In APP view, tap on the Record read icon on the lower left, enter the read record interface,under the interface click on the "Read data",can start to read data.

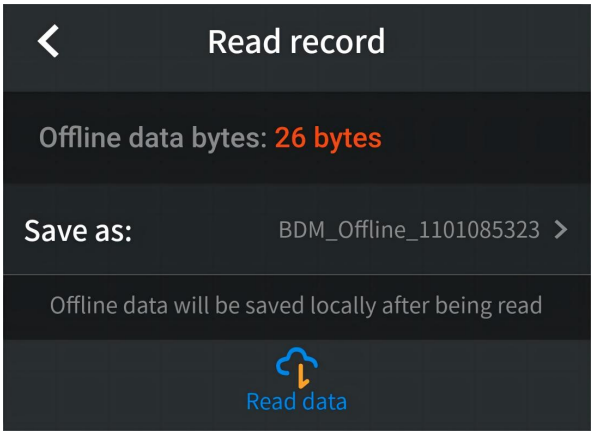

(6) Tap on Record read, APP will read the measuring data and save as a CSV file into the Mobile device. After reading, display as below:

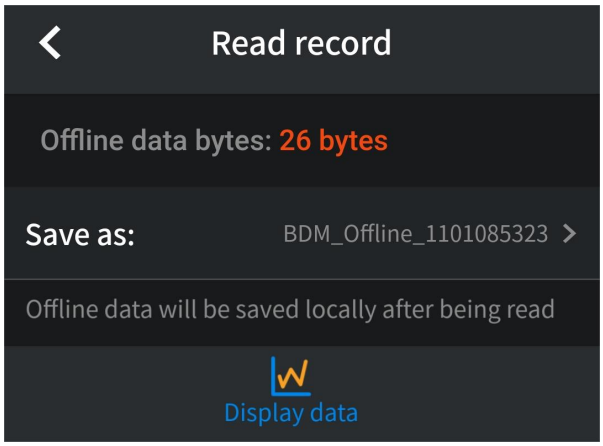

(7) Tap on

, the data will be displayed in Data Graph and Table interface.

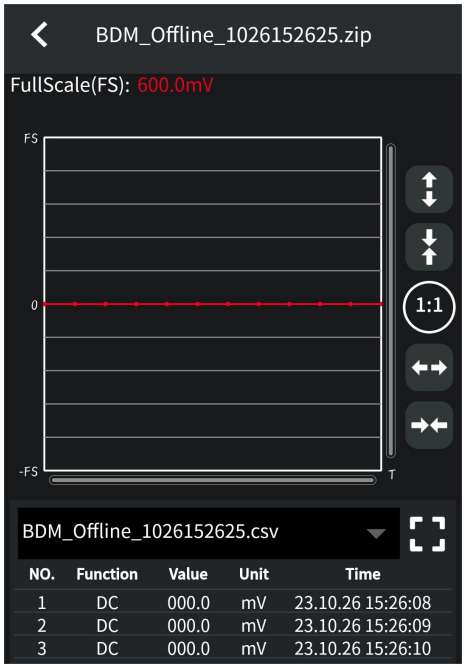

- **Add meter**: Click the "+" in the top left corner to start the search for devices and list the multimeters found.
- **Select meter**: Under the real-time data interface, click on the drop-down box to select the multimeter for reading.
- **Disconnect meter**: In the list of devices, select the multimeter you want to disconnect from, and swipe left after touching your finger. Click the delete button that slides out and click "OK" in the pop-up prompt to disconnect the multimeter.

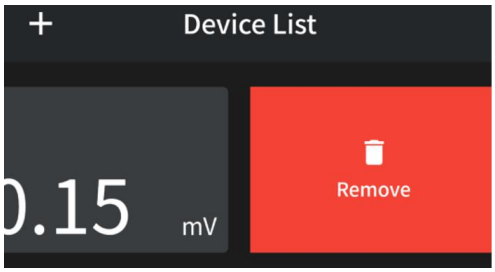

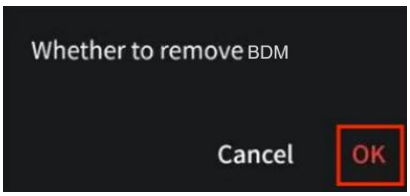

- **Remote Control**: In single view, the control softkeys (dark grey background softkeys, as Hold, Rel, Select, etc.) can be short or long pressed to perform control, just as press the corresponding keys of multimeter.
- **Data Graph and Table**: Click **Data Chart** to view data graph and table.

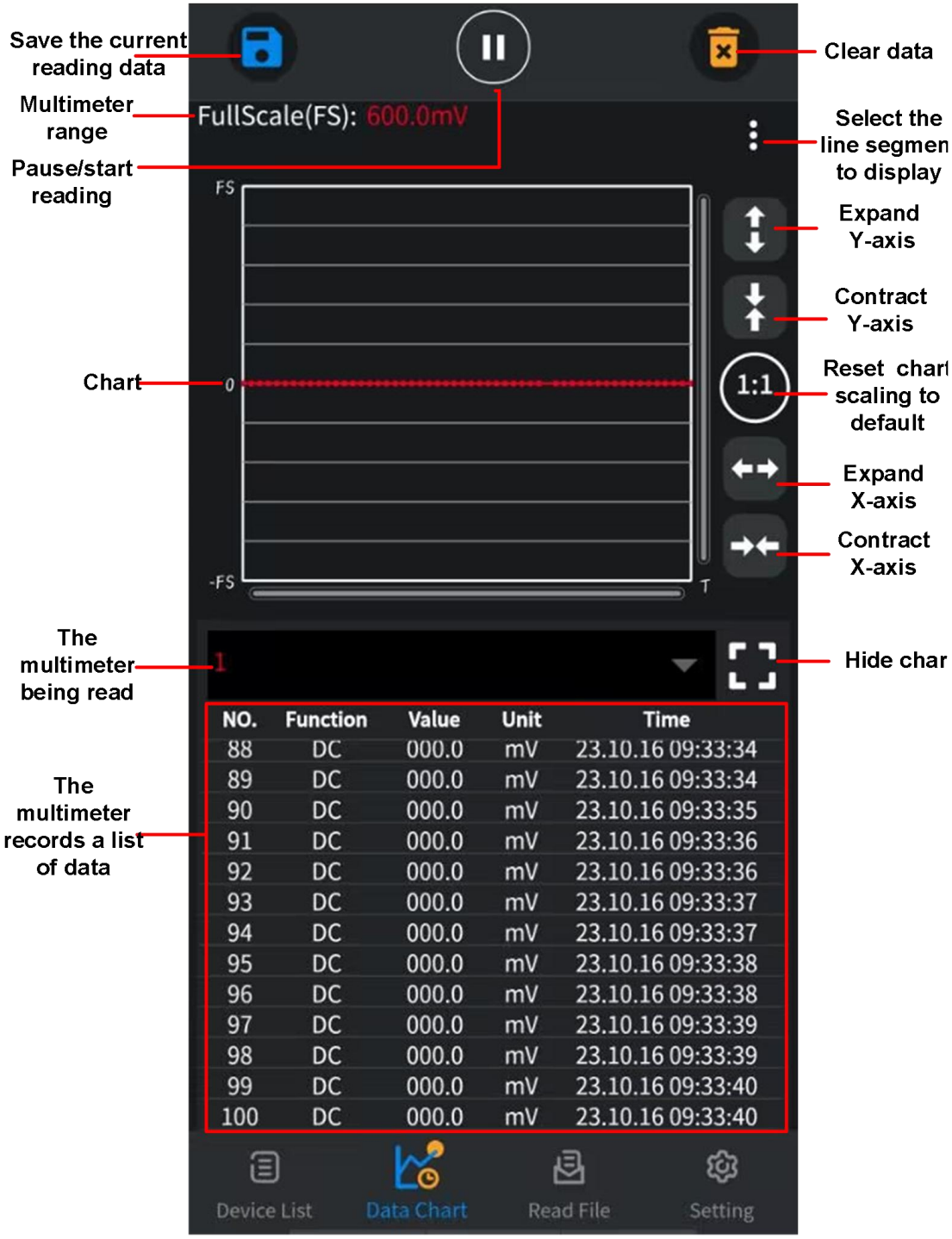

- **Read File**: Click **Read File** to open file interface.

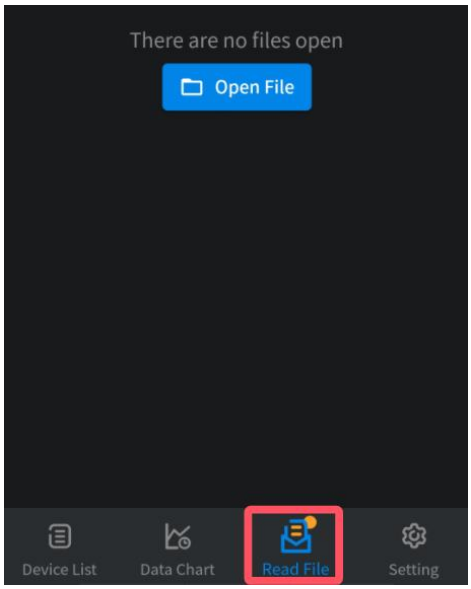

(1) Click ”Open File”.

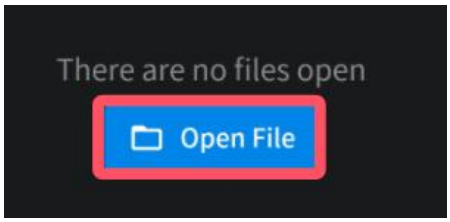

(2) Go to “Files”interface.

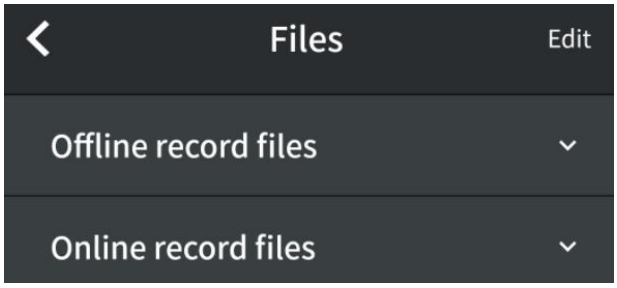

(3) Select data files (Offline record files & Online record files) as required. The following uses Online record files as an example:

- Click "Online record files" on the Local Files screen.

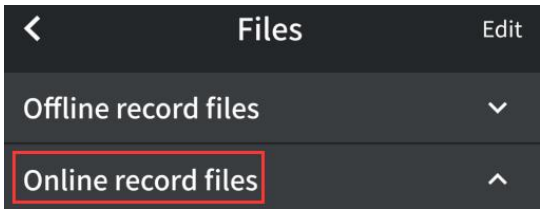

- Enter the Online record files interface and click the required data file.

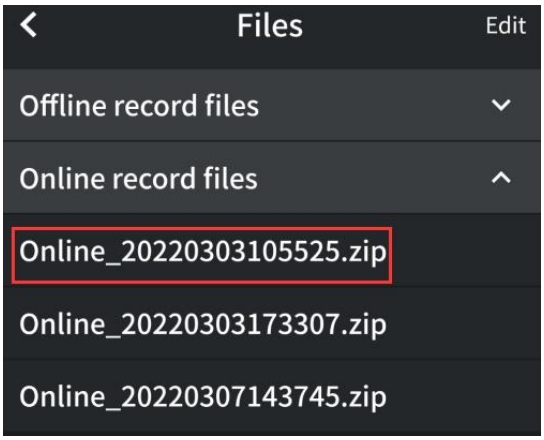

- On the data file editing page, you can Load data, Share, Rename, Remone, and Cancel data files.

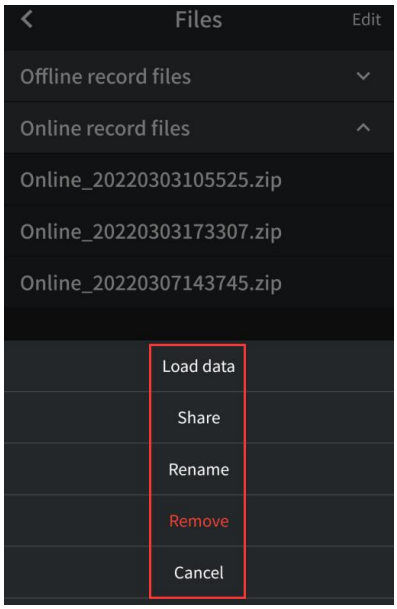

Setting: Click **Setting** to setting interface.

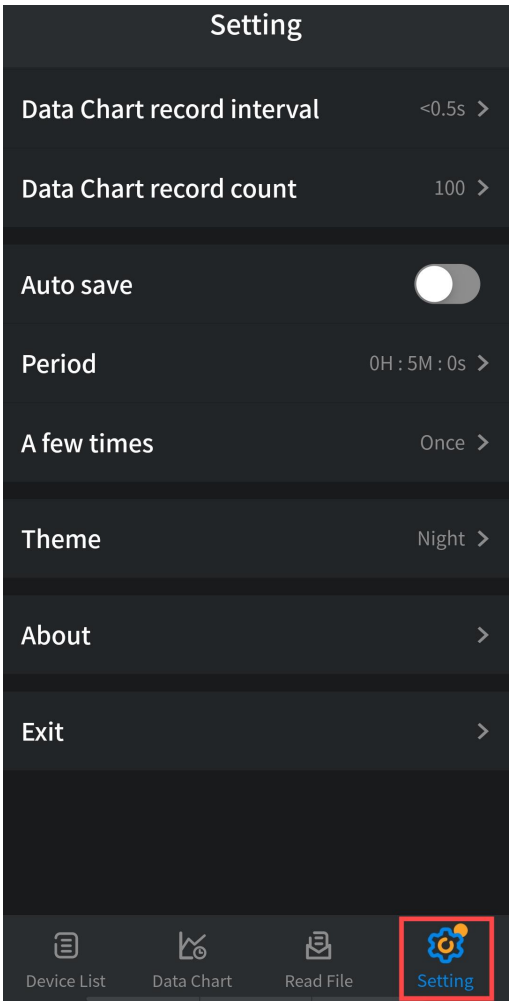

Data Chart record interval：Click Data Chart record interval , Set the recording interval in the display box below (setting range: 1S~11H:59M:59S). After setting the required interval, click ”OK”. Click Cancel or click anywhere outside the Settings box to cancel the current Settings.

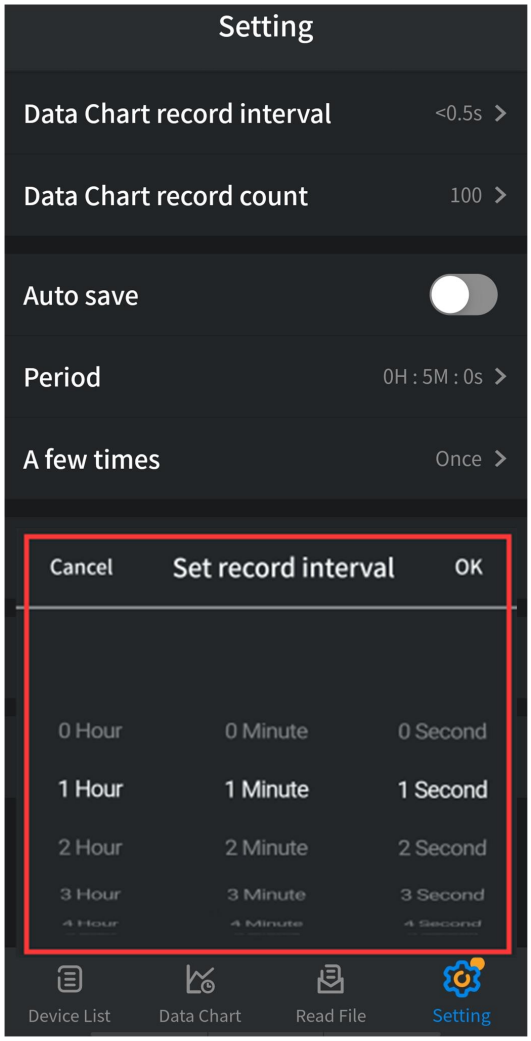

Data Chat record count : Click the number of records and set the number of records for real-time data in the display box below (set range: 100-3000). After setting the required number of records, click “OK”. Click Cancel or click anywhere outside the Settings box to cancel the current Settings.

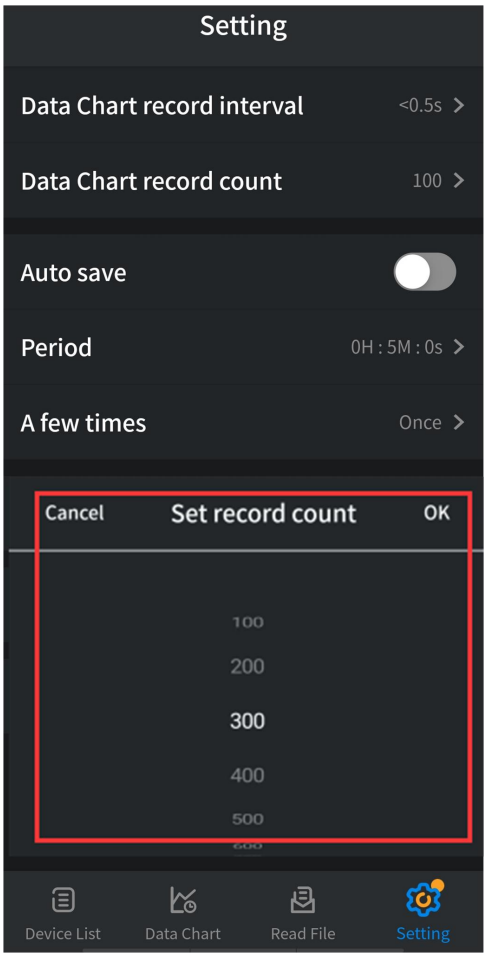

Auto save: Enable or disable the automatic storage of real-time data.

ON-State

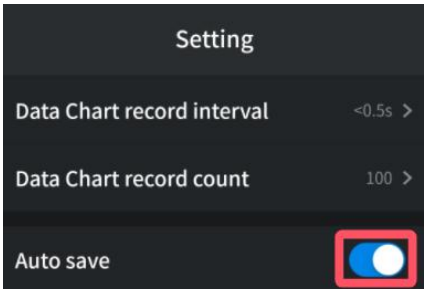

OFF-State

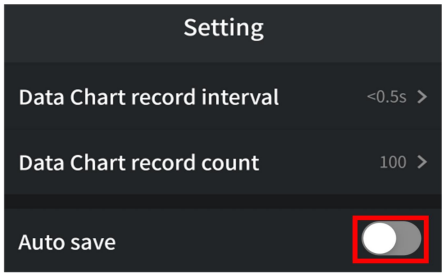

Setting Period: Click "**Period**" and set the recording Period in the display box below (setting range: 1S~11H:59M:59S). After setting the required Period, click "OK". Click Cancel or click anywhere outside the Settings box to cancel the current Settings.

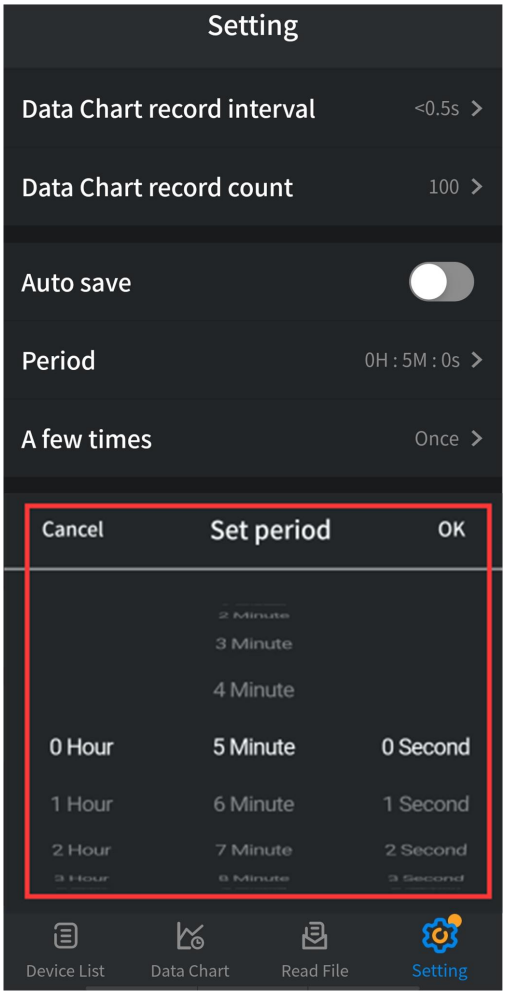

A few times： Click “**A few times”** and set the storage times in the display box below (set range: Once&10&20&30). After setting the required storage times, click “OK”. Click Cancel or click anywhere outside the Settings box to cancel the current Settings.

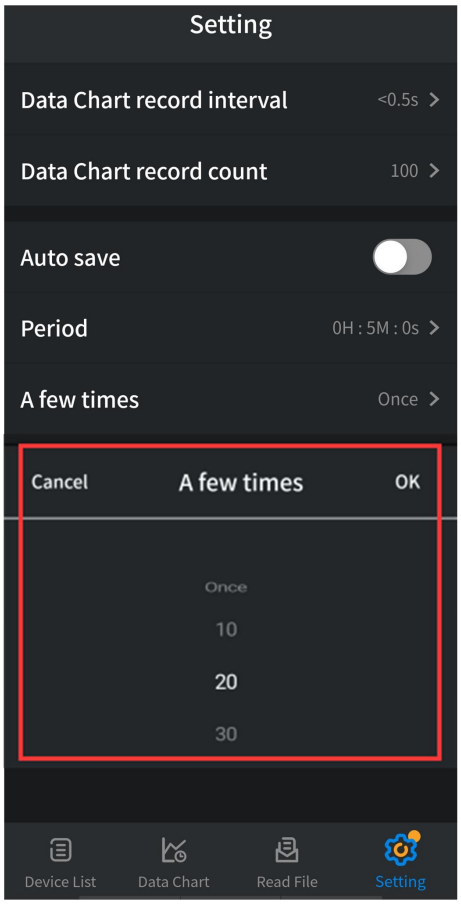

Theme: Click to select display theme as **"Night"** or **"Day "**, click **"Save"** to finish setting.

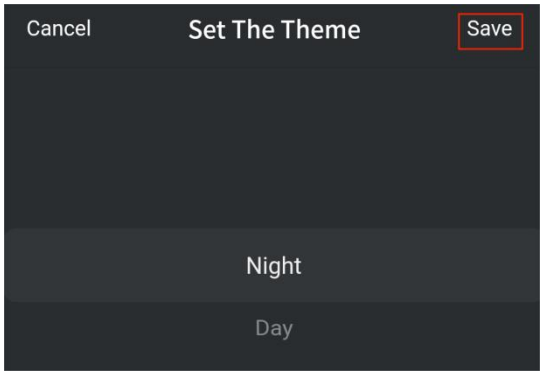

About: Click for information about the instrument.
Exit: Click to exit the current application.

6. Technical Specifications

All these specifications apply to the multimeter unless otherwise explanation.

Standard conditions: The environment temperature is 18℃ to 28℃, the relative humidity is less than 80%.

Note: When measuring AC voltage/current or capacitance, accuracy guarantee range is 5% to 100% of the range.

Function		Measurement Range	Resolution	Function
DC Voltage (V)	mV	60.00mV	0.01mV	±(0.5%+10dig)
		600.0mV	0.1mV	±(0.5%+5dig)
	V	6.000V	0.001V	
		60.00V	0.01V	
		600.0V	0.1V	
		1000V	1V	±(0.8%+5dig)
AC Voltage (V)	mV	600.0mV	0.1mV	±(1.0%+10dig)
	V	6.000V	0.001V	±(0.8%+8dig)
		60.00V	0.01V	±(0.8%+5dig)
		600.0V	0.1V	
		1000V	1V	±(1.0%+5dig)
DC Current (A)	μA	600.0μA	0.1μA	±(0.8%+8dig)
		6000μA	1μA	±(0.8%+5dig)
	mA	60.00mA	0.01mA	±(0.8%+8dig)
		600.0mA	0.1mA	±(0.8%+5dig)
	A	6.000A	0.001A	±(1.5%+8dig)
		10.00A [1]	0.01A	
AC Current (A)	μA	600.0μA	0.1μA	±(1%+5dig)
		6000μA	1μA	
	mA	60.00mA	0.01mA	
		600.0mA	0.1mA	
	A	6.000A	0.001A	±(1.5%+10dig)
		10.00A [1]	0.01A	
Resistance(Ω)		600.0Ω	0.1 Ω	

	6.000kΩ	0.001 kΩ	±(0.8%+5dig)
	60.00kΩ	0.01 kΩ	
	600.0kΩ	0.1 kΩ	
	6.000MΩ	0.001 MΩ	±(1.0%+5dig)
	60.00MΩ	0.01 MΩ	±(2.0%+5dig)
Capacitance(F)	60.00nF	0.01nF	±(3.0%+5dig)
	600.0nF	0.1nF	
	6.000μF	0.001μF	
	60.00μF	0.01μF	
	600.0μF	0.1μF	
	6000μF	1μF	±(4.0%+10dig)
	60.00mF [2]	0.01mF	
Diode Test	3.000V	0.001V	The open circuit voltage about 3.2V
Continuity test	600.0Ω	0.1 Ω	Threshold is 50Ω
Frequency [3] (Hz)	60.00Hz	0.01Hz	±(0.1%+3dig)
	600.0Hz	0.1Hz	
	6.000kHz	0.001kHz	
	60.00kHz	0.01kHz	
	600.0kHz	0.1kHz	
	6.000MHz	0.001MHz	
	10.00MHz	0.01MHz	
Duty Cycle	0.1%-99.9%	0.1%	---
Temperature (°C/°F)	-40 ℃ ~ 40 ℃	1 ℃	±(2.5%+5dig)
	+40 ℃ ~ 100 ℃		±(1.0%+3dig)
	+100 ℃ ~ 1000 ℃		
	-40 ºF ~ +32 ºF	1ºF	±(4.0%+8dig)
	+32 ºF ~ +210 ºF		±(2.0%+8dig)
	+210 ºF ~ +1832 ºF		±(5.0%+8dig)

[1] Specifications are for amplitude of sine wave input > 5% of range. 0.1% errors will be added when the range of input sine wave is 1% to 5%.

[2] Specifications are for amplitude of sine wave input > 0.5% of range. For inputs from 1% to 5% of range, add 0.1% of range extra error.

[3] Except for special marks, when frequency ≤ 10M Hz, the specification is applicable to >1V AC input voltage, when frequency > 10 MHz, the specification is applicable to >3V AC input voltage.

General Specification

Characteristic	Description
Range Maximum Reading Counts	6000
Frequency Response(Hz)	(40 - 1000) Hz
Sample rate for digital data	3 times/second
Bluetooth	√ (Only for B model)
Auto ranging	√
True RMS	√
Diodes Test	√
Sleep Mode	√
Continuity Test	√
Flashlight	√
Low battery indication	√
Data Hold	√
Relative Measurement	√
Backlight	√
Input Protection	√
Input Impedance	≥ 10 MΩ
Analog Bar	√
Dual Display	√
Maximum Hold	√
Minimum Hold	√
Peak (1ms)	√
Manual Ranging	√
Auto Power Off	√
Mis-Lead Insert Alert	√
Battery	3 micro batteries (3x 1.5 V, type AAA)
LCD Size	2.8 inch TFT LCD
Weight (without package)	Approx. 0.43 kg
Dimension	200 mm * 91mm * 43 mm
Working temperature	0℃ ~ 40℃
Storage temperature	-10℃ ~ 60℃
Relative Humidity	≤ 80%
Altitude	Operating: 3,000 meters Non-operating: 15,000 meters

Interval Period of Adjustment: One year is recommended for the calibration interval period.

7. Appendix

Appendix A: Enclosure

Standard Accessories:

Multimeter Leads

K-type thermocouple

Quick guide

Battery

Soft Bag

Appendix B: General Care and Cleaning

⚠ **Warning: To avoid electrical shock or damage to the multimeter, ensure that the insides of the casing stay dry at all times.**

Cleaning

To clean the instrument exterior, perform the following steps:

Wipe the dust from the instrument surface with a soft cloth. Do not make any scuffing on the screen when clean the LCD. Clean the instrument with a wet soft cloth not dripping water. It is recommended to scrub with soft detergent or fresh water. To avoid damage to the instrument, do not use any corrosive chemical cleaning agent.

Dirt or moisture in the terminals can distort readings. Follow the steps below to clean your multimeter.

1. Turn the multimeter off and remove the test leads.
2. Turn the multimeter over and shake out the dirt in the terminals.
3. Wipe the contacts in each terminal with a clean swab dipped in alcohol.