# High Accuracy Current Sensor

## CTA Series

- CTA20 20A/DC~1MHz
- CTA60 60A /DC ～800kHz
- CTA200 200A/DC ～500kHz
- CTA400 400A/DC ～500kHz
- CTA700 700A/DC ～100kHz
- CTA1000 1000A/DC～500kHz
- CTA1000B 1000A/DC～400kHz
- CTA2000 2000A/DC～140kHz（Aperture 70mm）
- CTA2000B 2000A/DC～140kHz（Aperture 80mm）

# 产品说明书

Product User Manual

## Preface

First of all, thank you for purchasing our products, this instruction manual is the description about the function, usage, operation attention points, etc. Before use, please read the instructions carefully and use correctly.

Manual annotation will use the following symbols to distinguish.

**This symbol means it is harmful to the machine and human body; you must strictly follow the instruction manual to operate.**

**Warn** — **In the case of wrong operation, the user risk injury. The content under this mark records the relevant matters needing attention to avoid such dangers.**

**Notice** — **The user may suffer minor injuries and material damage with the wrong operation. To avoid such situation, the matters under this mark need attention.**

**Note** — **This symbolizes important note about how to use the machine.**

To the safely use the machine, you must abide by the following safety precautions strictly. The violation against the manual is likely to damage the protective function of the machine. In addition, the company is not responsible for any safety problem caused by the violation of matters needing attention in operation.

**Warning**

- Please do not continue testing if the machine or the user is wet, there could result in a deadly electric shock.
- Please be careful to get an electric shock, pay attention to the highest input voltage.

**Note**

- During transporting and operating, please avoid vibration and impact, especially the impact caused by fall.
- Please avoid storing and operating under bad condition such as, direct sunlight, high temperature, damp or frost environment, which will cause deformation and worsen insulation, thus cannot meet the requirement.
- Before using, please check if there are malfunctions caused by the bad storing condition and transportation. When malfunction is confirmed, please contact the commercial agent or operator nearby.
- Please do not use the machine in dusty and wet environment since it is neither waterproof nor dustproof.

## CTA Series Brief Summary

| Type | Max current | | Bandwidth | Current transfer ratio |
|---|---|---|---|---|
| | DC | RMS | | |
| CTA20 | 20A | 20A | 1MHz | 1:200 |
| CTA60 | 60A | 42A | 800kHz | 1:600 |
| CTA200 | 200A | 141A | 500kHz | 1:1000 |
| CTA400 | 400A | 282A | 500kHz | 1:2000 |
| CTA700 | 700A | 495A | 100kHz | 1:1750 |
| CTA1000 | 1000A | 707A | 500kHz | 1:1000 |
| CTA1000B | 1000A | 707A | 400kHz | 1:1500 |
| CTA2000<br>CTA2000B | 2000A | 2000A | 140kHz | 1:2000 |

## 1. Summary

CTA series is the ultra-accuracy sensor that can measure both DC and AC. Its current range covers from 60A to 2000A with precision of 50 ppm and 1MHz bandwidth. By using Flux-gate technic, the CTA series realized high accurate measurement, excellent linearity, low DC offset, lower temperature drift, low insertion loss, high immunity to external field and low noise.

## 2. Application

- High accuracy and highly stable current feedback unit.
- Current calibration unit.
- Energy measurement.
- Medical Equipment.
- New energy vehicle electronics.

## 3. Instruction about the product and accessories

Take CTA200 as example:

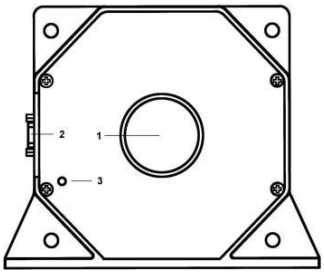


- **Sensor PTH (Primary Through Hole)：**

The input interface of the conductor under test, measuring the current under test. CTA20,CTA60, CTA200, CTA400PTH Diameter: 26mm； CTA700, CTA1000(B) PTH Diameter: 30mm; CTA2000 PTH Diameter: 70mm; CTA2000B PTH Diameter: 80mm;

- **Communication Port: including current output, power supply interface,** and status indicator function. The diagram below represents the pin configuration.

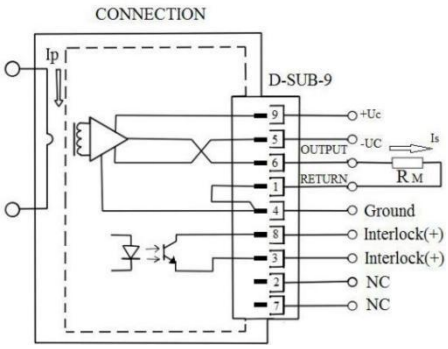


CTA20,CTA60, CTA200,CTA400,CTA1000B, CTA2000,CTA2000B Interface Diagram

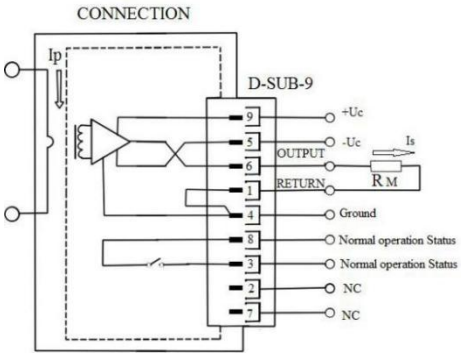


CTA700,CTA1000Interface Diagram

- **Status Indicator:** When the machine is working properly, the green light will on; when there's any situation, the light will be off.

## Accessories

**Power supply ( PS200 Series（without cable）)**

**Cable (CK-330): Connecting sensor, power supply and current output port**

**Note**

✧ **Cable CK-330:** Standard Length is 2 meter.Standard configuration.

✧ **Power Supply PS200 Series: PS201: one channels;PS202: two channels; PS204: four Channels; PS208: eight Channels;** every channel with ±15/1.5A of Voltage Output. Accessories are sold separately.

# 4. Specification

Test temperature: 25℃; Voltage Supplied: ±Uc =±15V

| Type | | CTA20 | | CTA60 | | CTA200 | | CTA400 | |
|---|---|---|---|---|---|---|---|---|---|
| Primary nominal continuous Direct current (IPN DC) | | 20A | | 60A | | 200A | | 400A | |
| Primary nominal rms current (IPN) | | 20A | | 42A | | 141A | | 282A | |
| Primary current, measuring range (IPM) | | ±20A | | ±60A | | ±200A | | ±400A | |
| Conversion ratio KN | | 1:200 | | 1:600 | | 1:1000 | | 1:2000 | |
| Secondary current (IS) | | ±100mA | | ±100mA | | ±200mA | | ±200mA | |
| Accuracy (DC)* | | 100ppm*±5uA | | | | | | | |
| Bandwidth(±3dB) | | 1MHz | | 800kHz | | 500kHz | | 500kHz | |
| Measuring resistance over operating current temperature and supply voltage range | | RM min | RM max | RM min | RM max | RM min | RM max | RM min | RM max |
| | | 0 | 60Ω | 0 | 60Ω | 0 | 30Ω | 0 | 2.5Ω |
| | | FIG.1 | | FIG.2 | | FIG.3 | | FIG.4 | |
| Overload capability @ pulse of 100ms | | ±100A | | ±300A | | ±1000A | | ±2000A | |
| Supply voltage | | ±15V(±5%) | | | | | | | |
| Supply current | | ≤80mA+IS | | | | | | | |
| Rated operational voltage RMS（IEC61010-1） | Basic insulation | 2000V | | 2000V | | 2000V | | 2000V | |
| | Reinforced insulation | 600V | | 600V | | 600V | | 600V | |
| Max measurement aperture | | 26mm | | | | | | | |
| Second interface | | D-Sub-9Pin | | | | | | | |
| Fastening screws and tightening torque | | M4 steel screw *4；2.8Nm；M5 steel screw *2；3.7Nm | | | | | | | |

| Type | CTA700 | CTA1000 | CTA1000B | CTA2000 | CTA2000B |
|---|---|---|---|---|---|
| Primary nominal continuous Direct current (IPN DC) | 700A | 1000A | 1000A | 2000A | 2000A |
| Primary nominal rms current (IPN) | 495A | 707A | 707A | 2000A | 2000A |
| Primary current, measuring range (IPM) | ±700A | ±1000A | ±1000A | ±2000A | ±2000A |
| Conversion ratio KN | 1:1750 | 1:1000 | 1:1500 | 1:2000 | 1:2000 |
| Secondary current (IS) | ±400mA | ±1000mA | ±666.666mA | ±1000mA | ±1000mA |
| Accuracy (DC)* | 50ppm±3uA | | | | |
| Bandwidth(±3dB) | 100kHz | 500kHz | 400kHz | 140kHz | 140kHz |
| Measuring resistance over operating current temperature and supply voltage range | RM min / RM max | RM min / RM max | RM min / RM max | RM min / RM max | RM min / RM max |
| | 0 / 2.5Ω | 0 / 3Ω | 0 / 2Ω | 0 / 1Ω | 0 / 1Ω |
| | FIG.5 | FIG.6 | FIG.7 | FIG.8 | |
| Overload capability @ pulse of 100ms | ±3500A | ±4000A | ±5000A | ±10kA | |
| Supply voltage | ±15V(±5%) | | | | |
| Supply current | ≤80mA+IS | | | ≤150mA+IS | |
| Rated operational voltage RMS（IEC61010-1） Basic insulation | 1600V | 300V | 300V | 1000V | |
| Rated operational voltage RMS（IEC61010-1） Reinforced insulation | 300V | 150V | 150V | 300V | |
| Max measurement aperture | 30mm | 30mm | 30mm | 70mm | 80mm |
| Second interface | D-Sub-9Pin | | | | |
| Fastening screws and tightening torque | M5 steel screw *4；3.7Nm<br>M6 steel screw *2；4.4Nm | | | M5 steel screw *4；3.7Nm | |

* All ppm figures refer to full-scale which corresponds to a secondary nominal RMS current.

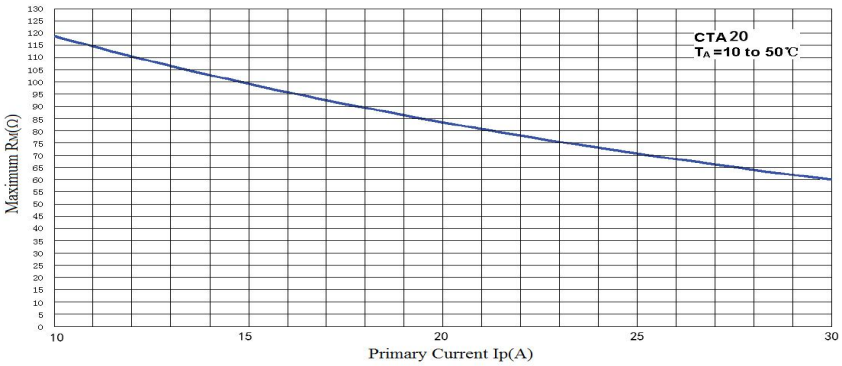


Figure1: CTA20 Maximum measuring resistor versus primary current

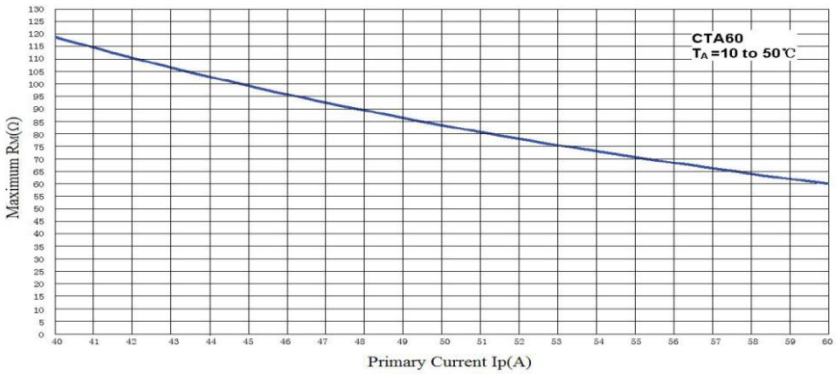


Figure 2: CTA60 Maximum measuring resistor versus primary current

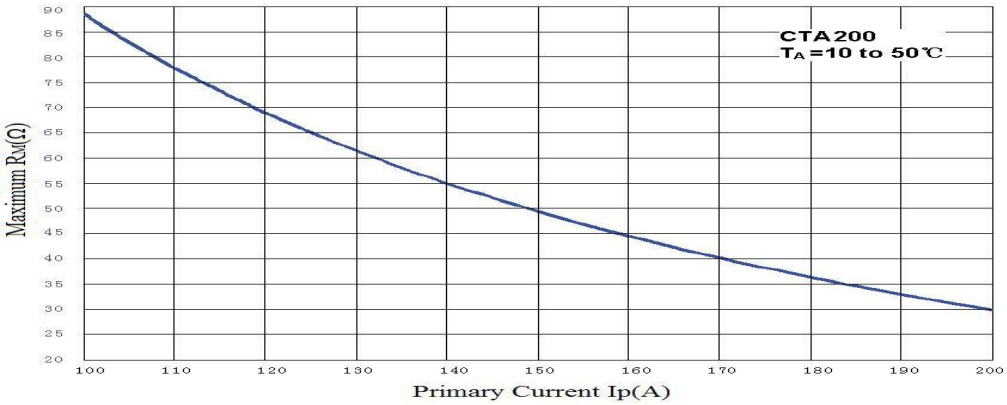


Figure 3: CTA200 Maximum measuring resistor versus primary current

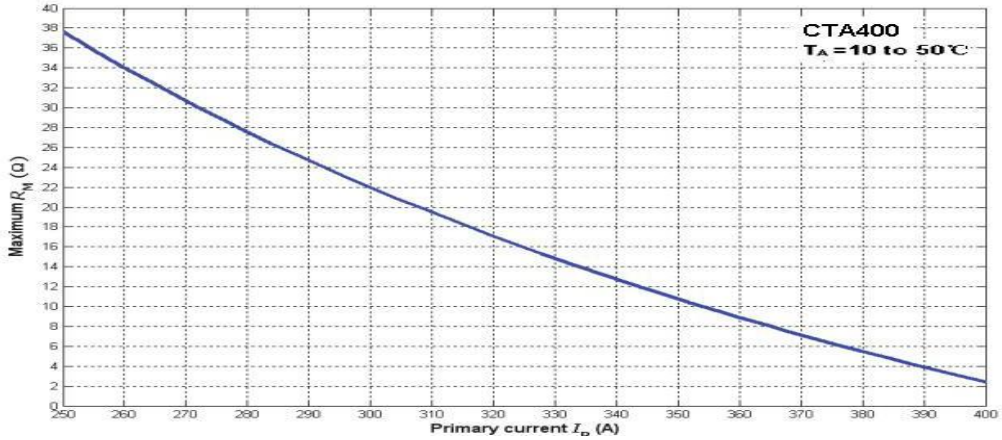


Figure 4: CTA400 Maximum measuring resistor versus primary current

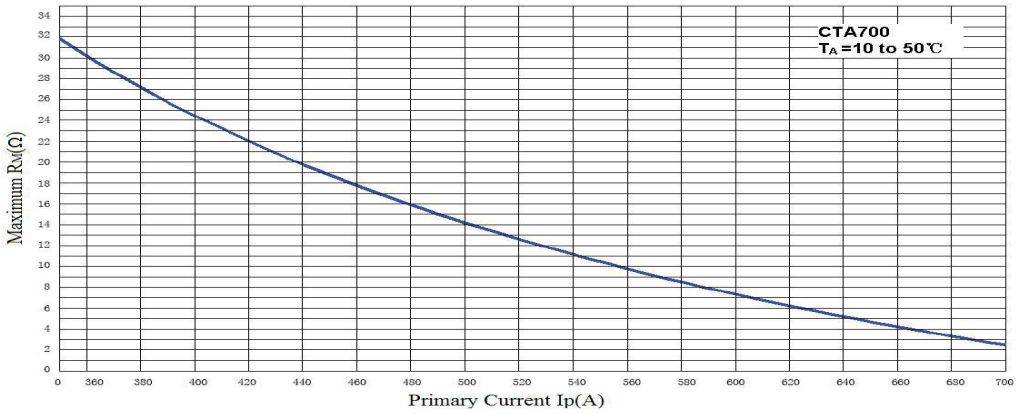


Figure 5: CTA700 Maximum measuring resistor versus primary current

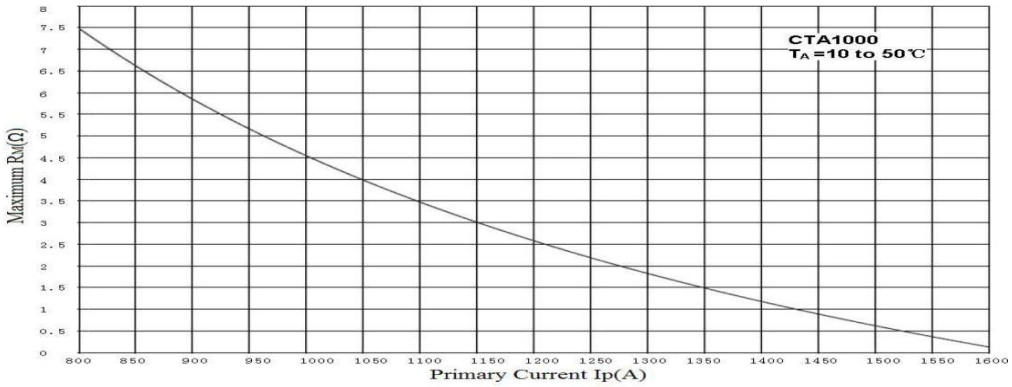


Figure 6: CTA1000 Maximum measuring resistor versus primary current

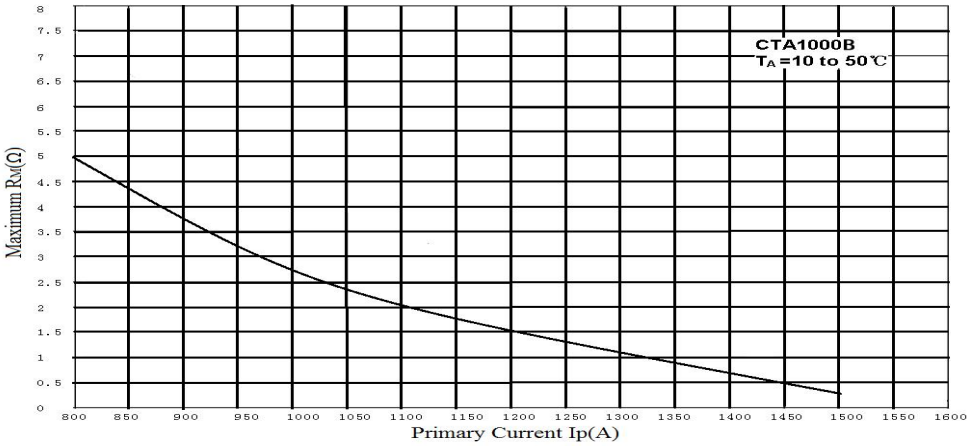


Figure 7: CTA1000B Maximum measuring resistor versus primary current

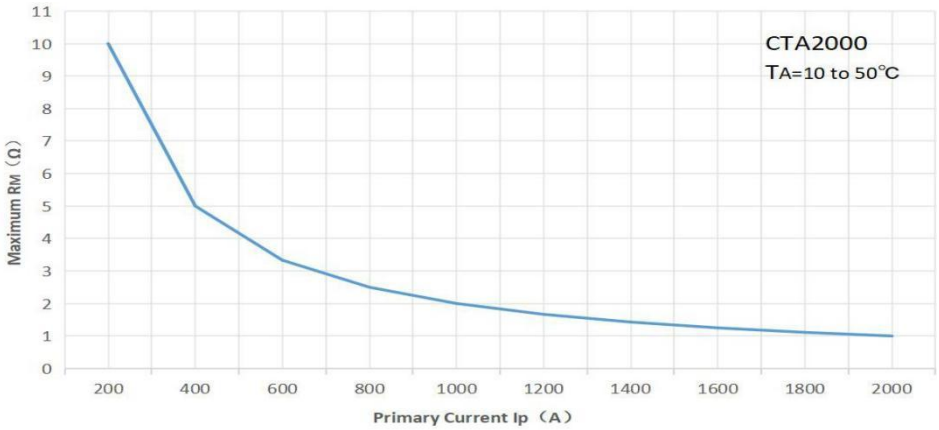


Figure 8: CTA2000/CTA2000B Maximum measuring resistor versus primary current

# 5. Operation Instruction

## 5.1 Overload Protection

When Primary Current surpassed the overload trigger point, the core flux-gate will be fully saturated, and then, the sensor will switch from the normal mode to overload mode.

The overload trigger point should be at least 1.1 times of Primary Nominal Continuous Direct Current. The actual overload point is related to overload resistor and working condition.

After the overload, the sensor will enter park mode. The sensor will automatically recover to normal status, when the primary current reduces into normal range (±Primary DC),

(Probably need to take a few seconds) In the overload mode:

- Secondary Current output will be low frequency triangular wave, the output range of CTA20,CTA60 will be ±100mA, the output range of CTA200 and CTA400 will be ±200mA, the output range of CTA700 will be ±400mA,the output range of CTA1000B will be ±666.666mA, the output range of CTA1000 and CTA2000(B) will be ±1000mA.
- Output port pin 3 and 8 disconnected
- Status Indicator will be off.

**Note** To make sure recover from saturation state to normal state, the overload resistance must not surpass the value below: CTA20/CTA60:60Ω; CTA200:30Ω; CTA400:2.5Ω;CTA700:2.5Ω;CTA1000:3Ω;CTA1000B:2Ω;

CTA2000/CTA2000B:1Ω

## 5.2 Status/Interlock Interface summary

① CTA20, CTA60,CTA200,CTA400,CTA1000B,CTA2000,CTA2000B

**Operating instruction**

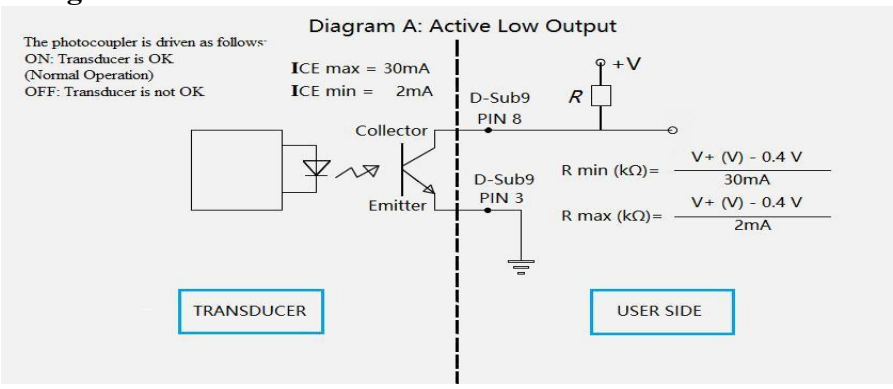


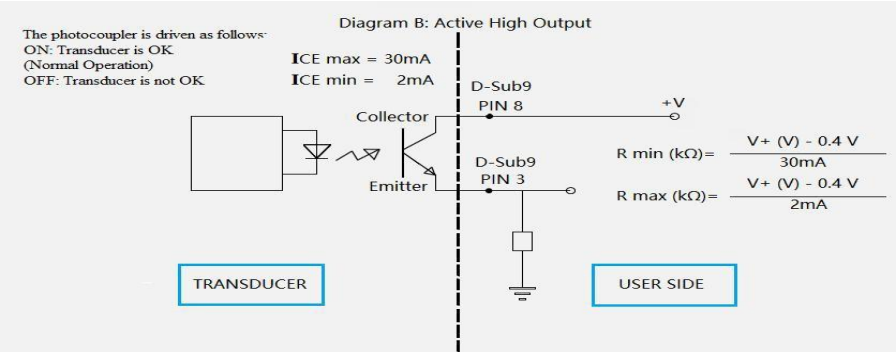


② **CTA700， CTA1000 Operating instruction：**

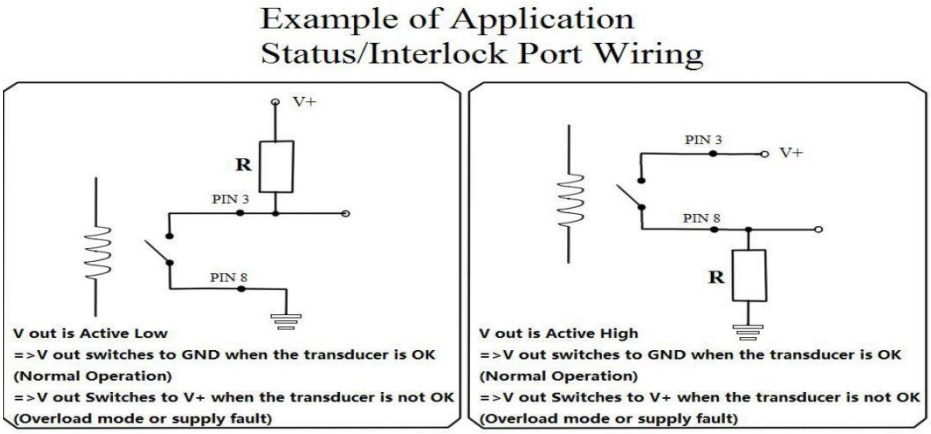


## 5.3 Operating Method

- ✧ Connect sensor and Power Supply
- ✧ Connect sensor and Measurement Device
- ✧ Turn on sensor, power it up
- ✧ Connect the cable under test and measure it.

**Attention** While measuring, to make the measurement result right, please turn on the power of the sensor and then connect the current under test and measure it.

### 5.4 The sensor wiring sample diagram of the CTA series is shown below:

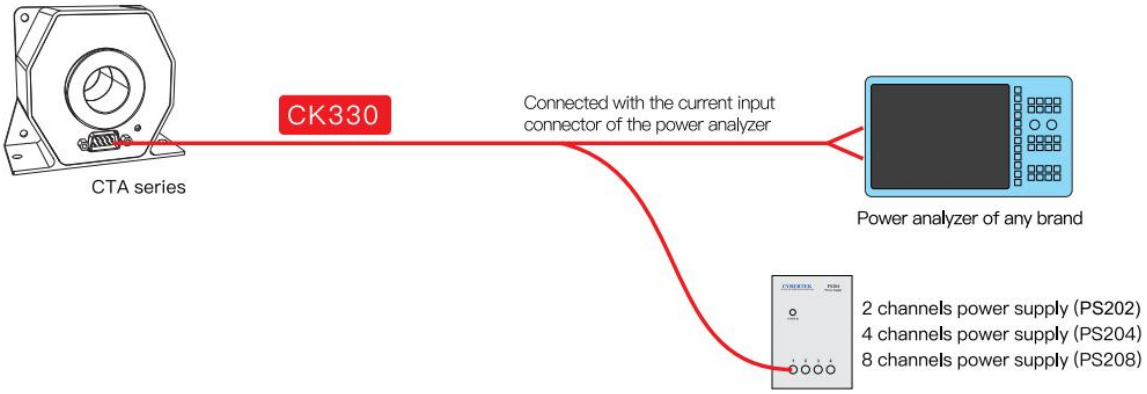


## 6. Mechanic Specification

### ■ CTA20,CTA60, CTA200,CTA400 Mechanic Specification

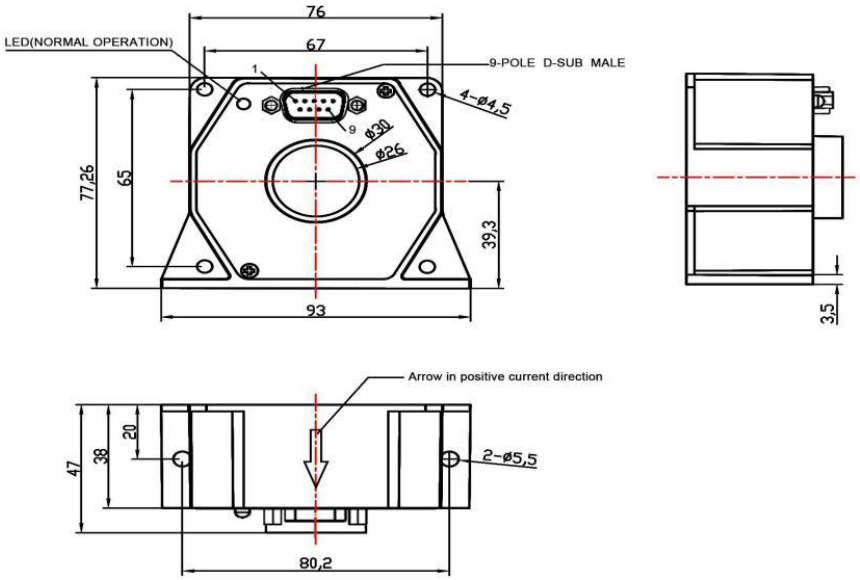


### ■ CTA700 CTA1000 Mechanic Specification

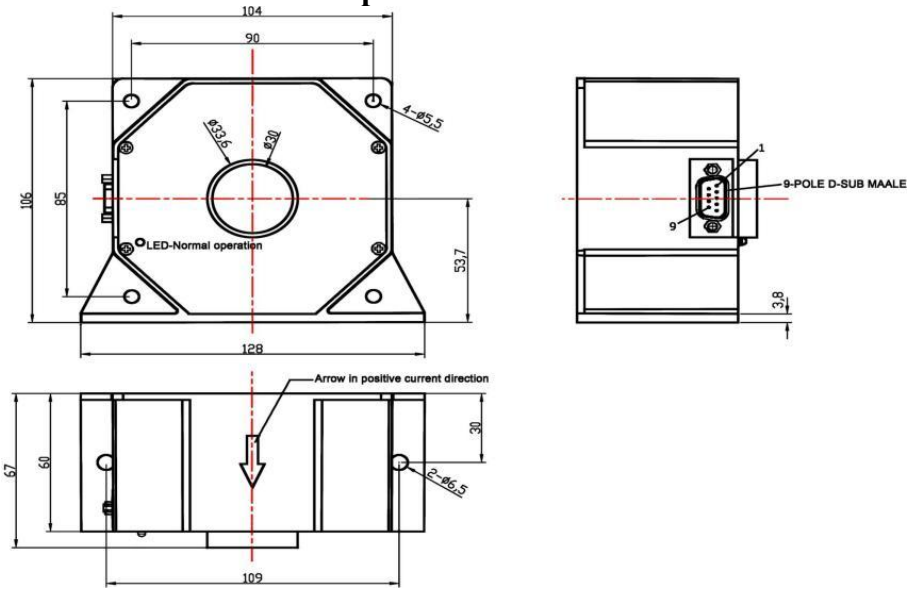

## CTA1000B Mechanic Specification

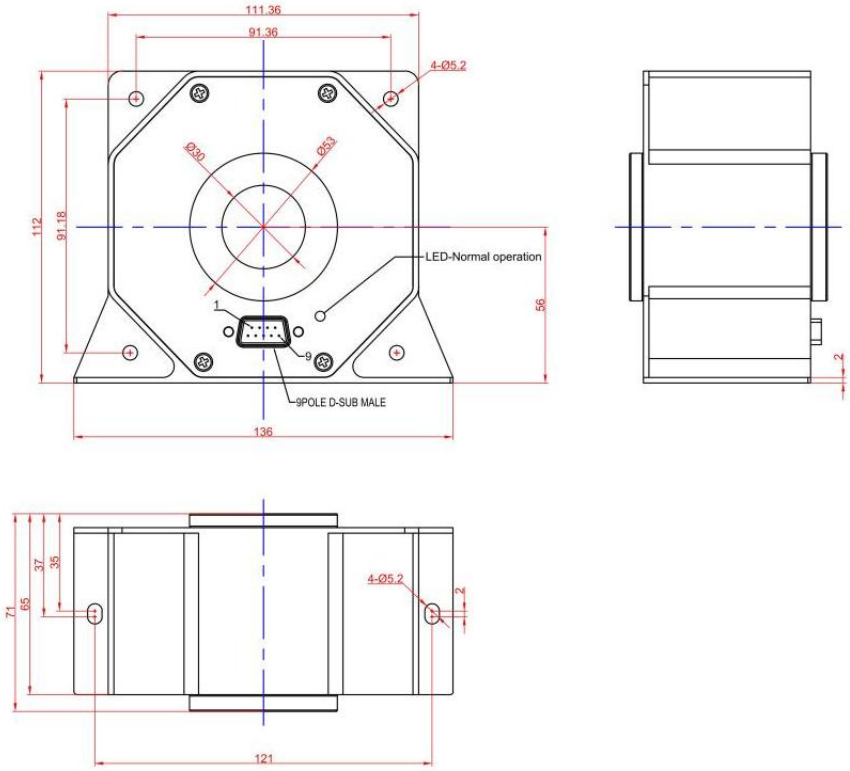


## CTA2000,CTA2000B Mechanic Specification

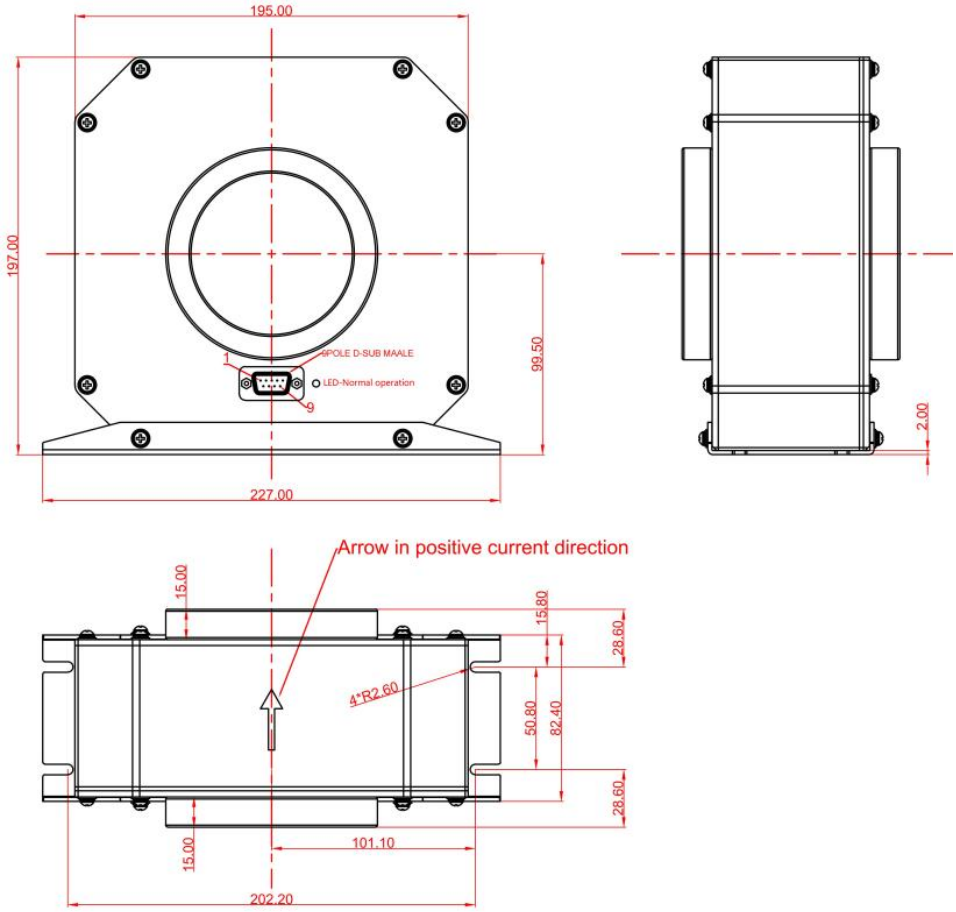

## 7. Environmental Characteristics

| | |
|---|---|
| Operating Temperature & Humidity | -40～85℃，20～80%RH |
| Storing Temperature & Humidity | -40～85℃，20～80%RH |

## 8. Packing List

| Packing List | |
|---|---|
| **Name** | **Quantity** |
| Current Sensor | 1 |
| Cable CK-330 | 1 |
| Instruction Book | 1 |
| Warranty Card | 1 |
| Test Report | 1 |

CYBERTEK

**SHENZHEN ZHIYONG ELECTRONICS CO., LTD.**

**Addr**: Room A1702, Building 4, TianAn Cyber Park, HuangGe Road, LongGang District, ShenZhen City, China

**Tel:** （86）400 852 0005 / （86 755）86628000

**Q Q:** 400 852 0005

**Email:** cybertek@cybertek.cn

**Url:** http://www.cybertek.cn

© Zhiyong Electronics, 2025

Published in China, Nov. 1, 2025