General Warranty

We warrant that the product will be free from defects in materials and workmanship for a period of 1 years from the date of purchase of the product by the original purchaser from our company. This warranty only applies to the original purchaser and is not transferable to a third party.

If the product proves defective during the warranty period, we will either repair the defective product without charge for parts and labour, or will provide a replacement in exchange for the defective product. Parts, modules, and replacement products used by our company for warranty work may be new or reconditioned like new. All replaced parts, modules and products become the property of our company.

In order to obtain service under this warranty, the customer must notify our company of the defect before the expiration of the warranty period. Customer shall be responsible for packaging and shipping the defective product to the designated service centre, a copy of the customers proof of purchase is also required.

This warranty shall not apply to any defect, failure or damage caused by improper use or improper or inadequate maintenance and care.

We shall not be obligated to furnish service under this warranty a) to repair damage resulting from attempts by personnel other than our company representatives to install, repair or service the product; b) to repair damage resulting from improper use or connection to incompatible equipment; c) to repair any damage or malfunction caused by the use of not our supplies; or d) to service a product that has been modified or integrated with other products when the effect of such modification or integration increases the time or difficulty of servicing the product.

Please contact the nearest Sales and Service Offices for services.

Excepting the after-sales services provided in this summary or the applicable warranty statements, we will not offer any guarantee for maintenance declared or hinted, including but not limited to the implied guarantee for marketability and special-purpose acceptability. We should not take any responsibilities for any indirect, special, or consequent damages.

※：The illustrations, interface, icons and characters in the user manual may be slightly different from the actual product. Please refer to the actual product.

Table of Contents

1. Safety Information 1
General Safety Requirements 1
Measurement Category 3
Safety Terms and Symbols 3
2. Quick Start 5
General Inspection 5
Install the Batteries 5
Adjusting the Tilt Stand 6
Power On/Off 6
Sleep Mode 6
Flashlight 7
Low impedance（Only for V-voltage scale） 7
Input terminals 7
Measurement Connections 8
Instrument Panel 11
Front Panel and Keys 11
Interface 12
3. To Connect with Mobile Device 14
How to Connect 14
4. Appendix 16
Appendix A: Enclosure 16
Appendix B: General Care and Cleaning 16

1. Safety Information

（**Be sure to read the safety information before using this product.**）

General Safety Requirements

Before any operations, please read the following safety precautions to avoid any possible bodily injury and prevent damage to this product or any other products connected. To avoid any contingent danger, use this product only as specified.

- Limit operation to the specified measurement category, voltage, or amperage ratings.
- **Do not use the multimeter if it is damaged.** Before you use the multimeter, inspect the case. Look for cracks or missing plastic. Pay particular attention to the insulation surrounding the connectors.
- **Do not use the test leads provided for other products.** Use only the certified test leads specified for this product.
- Inspect the test leads for damaged insulation or exposed metal.
- Before use, verify the multimeter's operation by measuring a known voltage.
- Only the qualified technicians can implement the maintenance.
- **Always use the specified battery type.** The power for the multimeter is supplied with a battery. Observe the correct polarity markings before you insert the batteries to ensure proper insertion of the batteries in the multimeter.
- **Check all Terminal Ratings.** To avoid fire or shock hazard, check all ratings and markers of this product. Refer to the user's manual for more information about ratings before connecting to the multimeter.
- Do not operate the multimeter with the cover or portions of the cover removed or loosened.
- **Do not operate if in any doubt.** If you suspect damage occurs to the multimeter, have it inspected by qualified service personnel before further operations.
- **Do not operate this product in wet or damp conditions.**
- **Do not operate in an explosive atmosphere.**
- **Keep product surfaces clean and dry.**
- Do not apply more than the rated voltage (as marked on the multimeter) between terminals, or between terminal and earth ground.
- When measuring current, turn off the circuit power before connecting the

multimeter in the circuit. Remember to place the multimeter in series with the circuit.

- When servicing the multimeter, use only the specified replacement parts.
- Use caution when working above 60 V DC, 30 V AC RMS, or 42.4 V peak. Such voltages pose a shock hazard.
- When using the test leads, keep your fingers behind the finger guards on the test leads.
- Remove the test leads from the multimeter before you open the battery cover.
- To avoid false readings, which may lead to possible electric shock or personal injury, replace the battery as soon as the low battery indicator appears and flashes.
- Disconnect circuit power and discharge all high-voltage capacitors before testing resistance, continuity, diodes, or capacitance.
- **Use the proper terminals, function, and range for your measurements.** When the range of the value to be measured is unknown, set the rotary switch position as the highest range, or choose the auto ranging mode. To avoid damages to the multimeter, do not exceed the maximum limits of the input values shown in the technical specification tables.
- Connect the common test lead before you connect the live test lead. When you disconnect the leads, disconnect the live test lead first.
- Before changing functions, disconnect the test leads from the circuit under test.

Measurement Category

The multimeter has a safety rating of 1000 V, CAT III and 600 V, CAT IV.

Measurement category definition

Measurement CAT I applies to measurements performed on circuits not directly connected to the AC mains. Examples are measurements on circuits not derived from the AC mains and specially protected (internal) mains-derived circuits.

Measurement CAT II applies to protect against transients from energy-consuming equipment supplied from the fixed installation, such as TVs, PCs, portable tools, and other household circuits.

Measurement CAT III applies to protect against transients in equipment in fixed equipment installations, such as distribution panels, feeders and short branch circuits, and lighting systems in large buildings.

Measurement CAT IV applies to measurements performed at the source of the low-voltage installation. Examples are electricity meters and measurements on primary over current protection devices and ripple control units.

Safety Terms and Symbols

Safety Terms

Terms in this Manual. The following terms may appear in this manual:

⚠ **Warning:** Warning indicates the conditions or practices that could result in personal injury or death.

⚠ **Caution:** Caution indicates the conditions or practices that could result in damage to this product or other property.

Terms on the Product. The following terms may appear on this product:

Danger: It indicates an injury or hazard may immediately happen.

Warning: It indicates an injury or hazard may be accessible potentially.

Caution: It indicates a potential damage to the instrument or other property might occur.

Safety Symbols

Symbols on the Product. The following symbol may appear on the product:

⎓	Direct current (DC)		Fuse
∼	Alternating current (AC)	⚠	Caution, risk of danger (refer to this manual for specific Warning or Caution information)
≂	Both direct and alternating current	CAT I	Category I overvoltage protection
⏚	Ground terminal	CAT II	Category II overvoltage protection
CE	Conforms to European Union directives	CAT III	Category III overvoltage protection
⧈	Equipment protected throughout by double insulation or reinforced insulation	CAT IV	Category IV overvoltage protection

2. Quick Start

General Inspection

After you get a new multimeter, make a check on the instrument according to the following steps:

1. **Check whether there is any damage caused by transportation.**

   If it is found that the packaging carton or the foamed plastic protection cushion has suffered serious damage, do not throw it away first till the complete device and its accessories succeed in the electrical and mechanical property tests.

2. **Check the Accessories**

   The supplied accessories have been already described in the *Appendix A: Enclosure* of this Manual. You can check whether there is any loss of accessories with reference to this description. If it is found that there is any accessory lost or damaged, please get in touch with our distributor responsible for this service or our local offices.

3. **Check the Complete Instrument**

   If it is found that there is damage to the appearance of the instrument, or the instrument can not work normally, or fails in the performance test, please get in touch with our distributor responsible for this business or our local offices. If there is damage to the instrument caused by the transportation, please keep the package. With the transportation department or our distributor responsible for this business informed about it, a repairing or replacement of the instrument will be arranged by us.

Install the Batteries

The multimeter is powered by three AAA 5V battery.

⚠ **Warning: To avoid false readings, which could lead to possible electric shock or personal injury, replace the battery as soon as the low battery indicator appears.**
Before replacing the battery, turn off the meter, disconnect test leads and any connectors from any circuit under test, remove test leads from the input terminals. Use only the specified battery type.

Use the following procedure to install the batteries.

(1) Ensure that the rotary switch is at the **OFF** position. Remove test leads and any connectors from the input terminals.

(2) Lift the tilt stand and loosen the screws with a suitable Phillips screwdriver and remove the battery cover.

(3) Observe the battery polarity indicated inside the battery compartment, Insert the batteries.

(4) Place the battery cover back in its original position and tighten the screws.

⚠ **Caution:** To avoid instruments being damage from battery leakage, always remove the batteries and store them separately if the multimeter is not going to be used for a long period.

Adjusting the Tilt Stand

Pull the tilt stand outward to its maximum reach (about 85° to the meter body).

Power On/Off

(1) To power ON the multimeter, turn the rotary switch to any other position except **OFF**.

(2) To power OFF the multimeter, turn the rotary switch to the **OFF** position.

Note: When replacing the battery or experiencing time deviation, please adjust the time in system settings.

Sleep Mode

You can set the sleep time by yourself. If you do not move the rotary switch or any key within the preset time, the multimeter will automatically shut down and enter the sleep state to save battery power.

Pressing **SELECT** or turn the rotary switch will turn the multimeter back to operation mode from the sleep mode.

One minute before Auto Power-off, the buzzer will beep five times to warn. Before shutoff, the buzzer will emit a long beep, and then the multimeter will shut off.

Note: In sleep mode, the multimeter will still consume a little power. If the multimeter is not going to be used for a long period, the power should be turned off.

Flashlight

Pressing open flashlight menu. When press **F1** to select **TORCH** to turn on/off both the front and back flashlights. When press **F2** to select **FRONT** to turn on/off the front flashlight. When press **F3** to select **BACK** to turn on/off the back flashlight.Press **F4** to select **EXIT** or other functional measures to exit flashlight menu.

Low impedance（Only for V-voltage scale）

This function may only be used for voltages of a max. of 1,000 V and a max. of 3 seconds!

This function enables reducing the measuring impedance from 10 MΩ to 400 kΩ in the voltage measuring range. Through the reduction of the measuring impedance, possible phantom voltages are suppressed, which could falsify the measuring result. Press this button LoZ during voltage measurement (max. 1,000 V!) for a max. of 3 seconds. After release, the multimeter has the normal measuring impedance of 10 MΩ . While the button is pressed, a signal
It sounds and the display “Loz” appears.

Input terminals

The terminal connections for the different measurement functions of the multimeter are described in the table below.

Measurement Function	Input Terminals		Overload Protection
V≅ or mV≅	VΩ⊣⊢ ⊣⊢°C Hz	COM	1000 VAC/1000 VDC
⊣⊢ ◦))) Ω	VΩ⊣⊢ ⊣⊢°C Hz	COM	1000 VAC/300 VDC
Hz%			
⊣⊢			
°C/°F			
µA≅ or mA≅	mAµA	COM	600mA/1000V fast-acting fuse
A≅	A	COM	10A/1000V fast-acting fuse

⚠ **Warning: Before starting any measurement, observe the rotary switch position of the multimeter, and then connect the test leads to the correct terminals.**

⚠ **Caution:** To avoid damaging the multimeter, do not exceed the rated input limit.

Measurement Connections

After selecting the desired measurement function, please connect the signal (device) under test to the oscilloscope meter according to the method below. To avoid instrument damage, do not discretionarily switch the measurement function when measuring.

DC Voltage Measurement

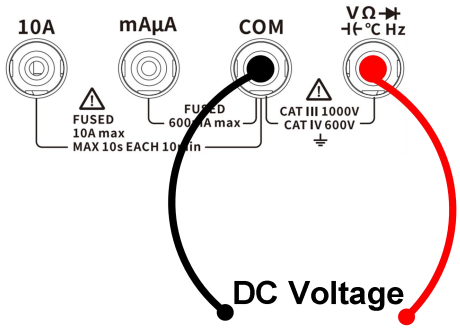

AC Voltage Measurement

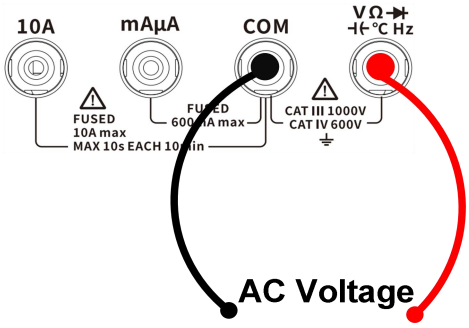

DC Current Measurement

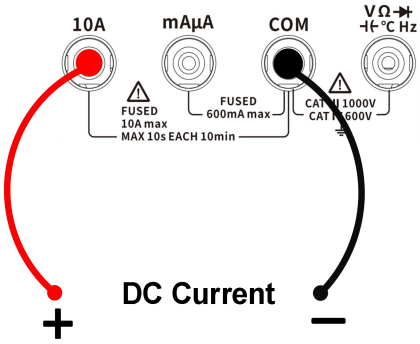

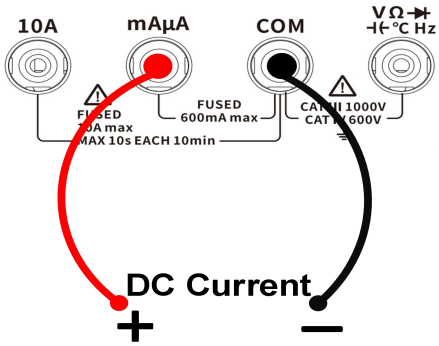

AC Current Measurement

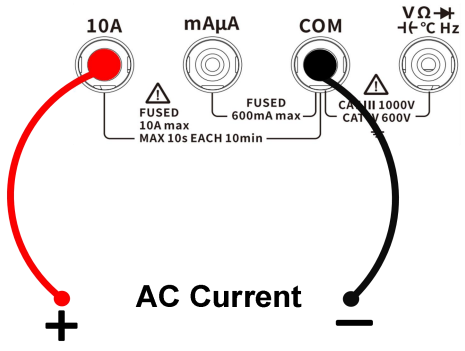

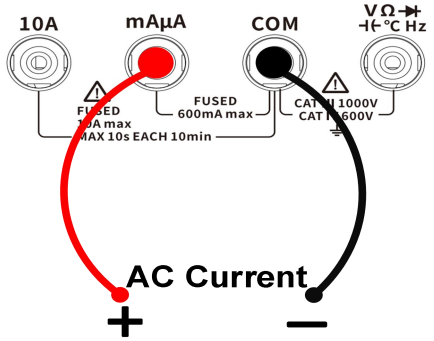

Resistance Measurement

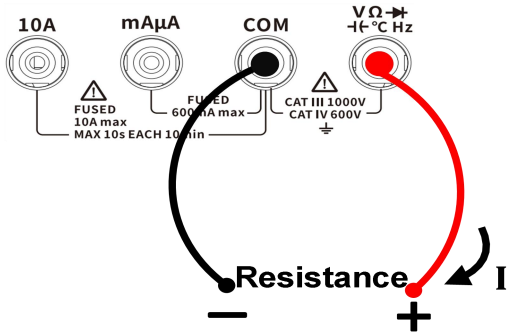

Continuity Test

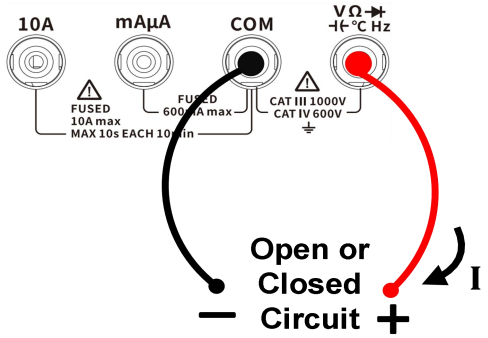

Diode Measurement

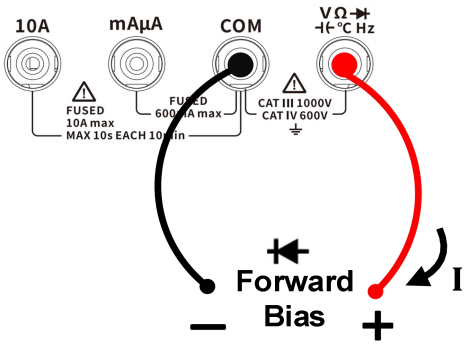

Capacitance Measurement

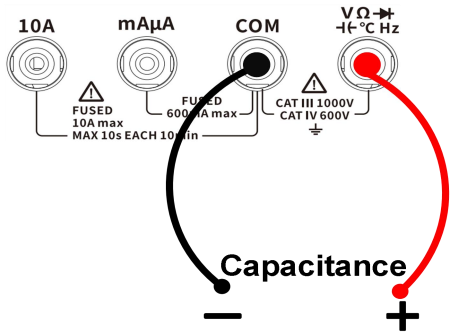

Frequency Measurement

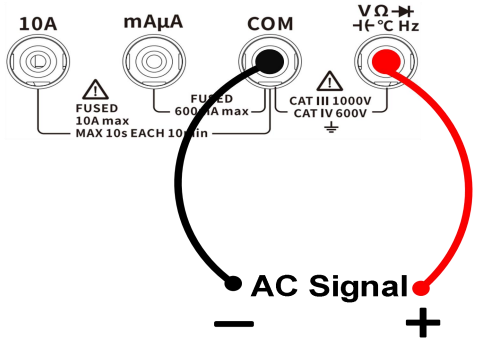

Temperature Measurement

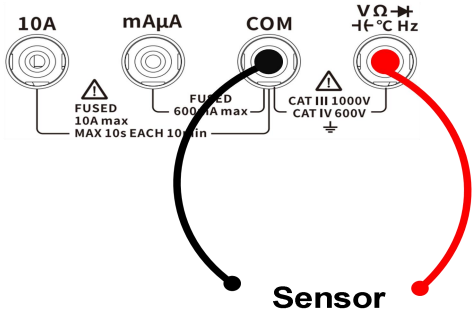

Instrument Panel

Front Panel and Keys

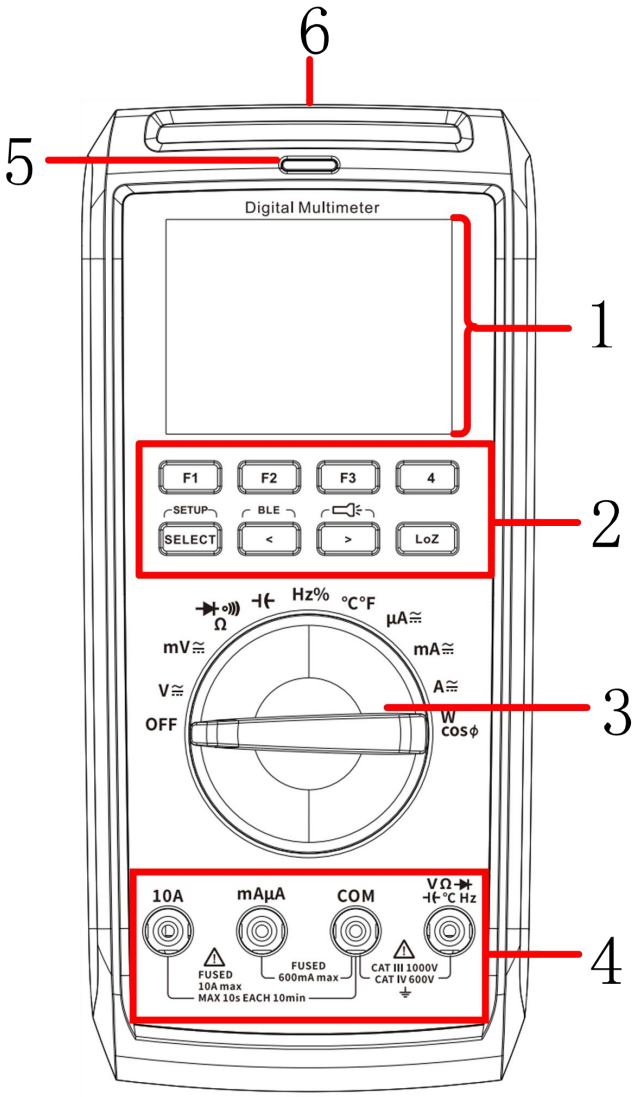

Description:

No.	Description	
1	Display Screen.	
2	Key	**F1~F4**: Menu selection key, press will activate the corresponding menu.
		SETUP SELECT: For switching different modes of the same tap in the turntable; hold down to enter the system setting.
		BLE < / >: For the bottom menu bar in the selection of the next page. In the setting interface used to control

		the item left and right unit selection. Long press "<" to turn on the Bluetooth mode, long press ">" to turn on the flashlight.
		LoZ: Press it to enter LoZ mode.
3	Rotary Switch	OFF: Power off.
		V≅ / mV≅: DC or AC voltage measurement.
		Ω: Diode/Continuity/Resistance measurement.
		⊣⊢: Capacitance measurement.
		Hz%:Frequency measurement.
		°C°F: Temperature measurement.
		µA≅ / mA≅ / A≅ : DC or AC current measurement.
		W cosϕ: Power and power factor measurement.
4	Input terminals.	
5	LED indicator.	
6	Flashlight.	

Interface

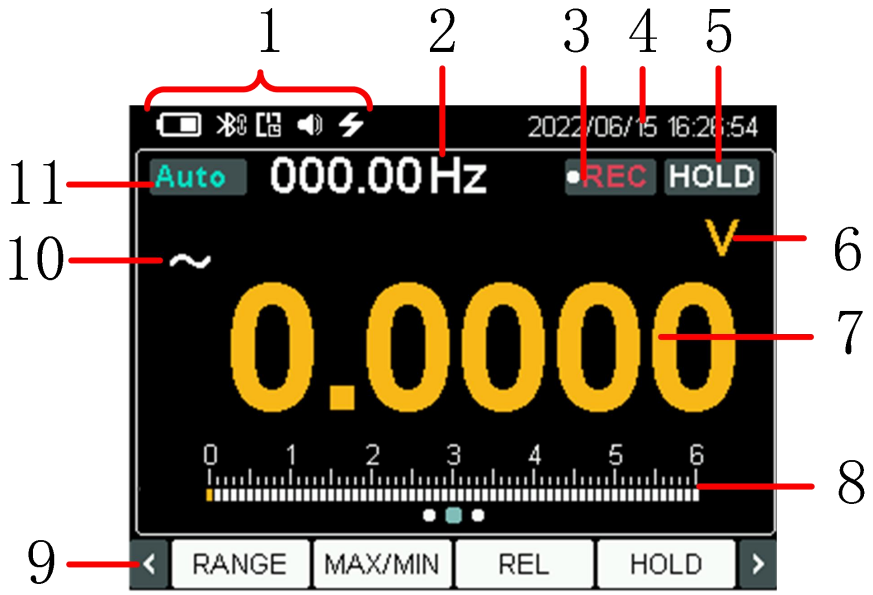

No.	Description
①	From left to right: battery display, Bluetooth on, Bluetooth connection, timer shutdown, buzzer, high voltage prompt
②	Frequency measurement
③	Offline records

④	Calendar&Time
⑤	Data hold enabled
⑥	Display unit of measurement
⑦	Display measured value
⑧	Analog range bar
⑨	Measurement menu
⑩	DC or AC mode
⑪	Auto range

3. To Connect with Mobile Device(Only for B model)

Bluetooth model supports communications with Android or iOS based smart device through Bluetooth. You can use the free application software on the smart devices to monitor the measurements, perform remote control, view trending graphs, etc. The recorded data can be saved as CSV file. The maximum number of record that can be stored depends on the free storage space in your smart device. More than one meters can be connected simultaneously.

Note: Bluetooth connectivity works over a range of about 7 to 8 meters. The work range is much longer in open-sided and non-occluded wide range environment, even up to 20 meters.

How to Connect

(1) On the mobile device, scan the QR code below and follow the instructions to install the free multimeter app.

(2) Open the installed application on your mobile device.

(3) Turn on the multimeter, press and hold

until appear on the display.

(4) Click on **"Device List"** in the bottom navigation bar.

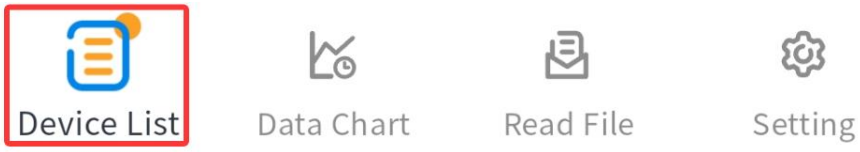

(5) Click the **"+"** icon in the upper left corner to begin searching for devices and list out the multimeters found.

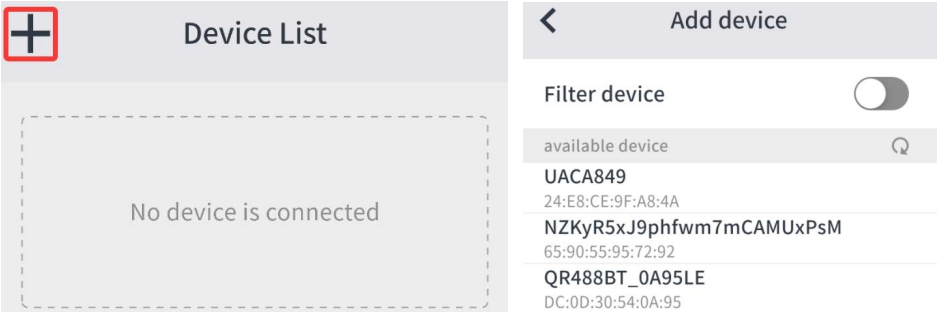

(6) If the Bluetooth of the mobile device is not enabled, a prompt box will pop up at the bottom, indicating **"Bluetooth is not turned on"**. You need to manually open the Bluetooth of the mobile device before connection can be made.

(7) Active **"Filter device"** to hide incompatible multimeters.

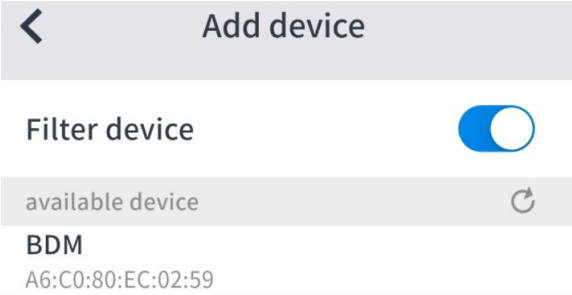

(8) After **"BDM"** appears in the list of available devices, click and select to connect it to the mobile device.

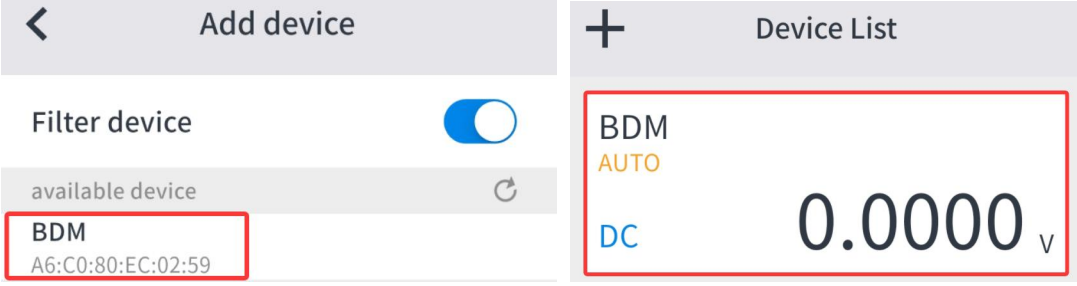

4. Appendix

Appendix A: Enclosure

(The accessories subject to final delivery.)

Standard Accessories:

Multimeter Leads

K-type thermocouple

Quick guide

Battery

Soft Bag

Option Accessories:

AC Power Measurement Module

USB Power Measurement Module

DC Power Measurement Module

Appendix B: General Care and Cleaning

⚠ **Warning:** To avoid electrical shock or damage to the multimeter, ensure that the insides of the casing stay dry at all times.

Cleaning

To clean the instrument exterior, perform the following steps:

Wipe the dust from the instrument surface with a soft cloth. Do not make any scuffing on the screen when clean the LCD. Clean the instrument with a wet soft cloth not dripping water. It is recommended to scrub with soft detergent or fresh water. To avoid damage to the instrument, do not use any corrosive chemical cleaning agent.

Dirt or moisture in the terminals can distort readings. Follow the steps below to

clean your multimeter.

1. Turn the multimeter off and remove the test leads.
2. Turn the multimeter over and shake out the dirt in the terminals.
3. Wipe the contacts in each terminal with a clean swab dipped in alcohol.

V1.0.2